

# Hybrid L S21

Centralised ventilation unit for small apartments

- Sound pressure level LpA at 1 m: 42
- Heat exchanger type: Counter flow
- Heat exchanger material: Polystyrene
- Sound-insulated casing
- Bypass: Auto
- BMS protocol: ModBus
- Control: Wireless control panel, Smartphone, Built-in control panel
- Casing material: Galvanized steel
- Humidity sensor: Optional
- CO2 sensor: Optional
- PM2.5 sensor: Optional
- Temperature sensor: Built-in

| | Unit of measurement | Hybrid L S21 | | |
|---|---|---|---|---|
| Phases | - | 1 | | |
| Minimum supply voltage | V | 230 | | |
| Maximum supply voltage | V | 230 | | |
| Power supply frequency | Hz | 50/60 | | |
| Maximum airflow | m³/h | 60 | 90 | 160 |
| Sound pressure level LpA at 1 m | dB(A) | 42 | | |
| Heat recovery efficiency, max | % | 95 | | |
| Heat exchanger type | - | Counter flow | | |
| Heat exchanger material | - | Polystyrene | | |
| Weight | kg | 31 | | |
| Transported air temperature (max) | °C | 40 | | |
| Transported air temperature (min) | °C | -25 | | |
| Minimum wall thickness | mm | 70 | | |
| Maximum wall thickness | mm | 2000 | | |

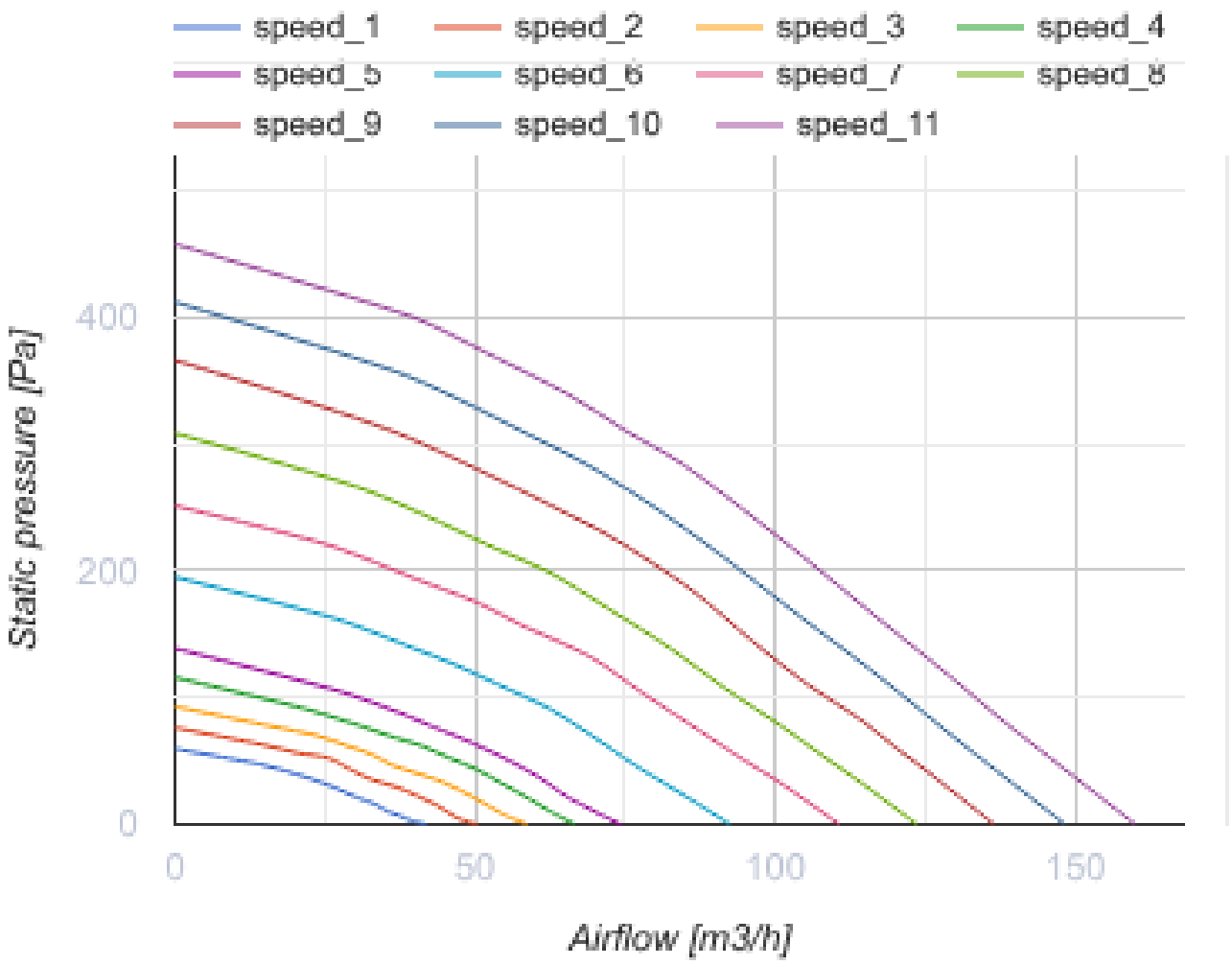
speed_1
speed_2
speed_3
speed_4
speed_5
speed_6
speed_7
speed_8
speed_9
speed_10
speed_11
Static pressure [Pa]
400
200
0
0
50
100
150
Airflow [m3/h]

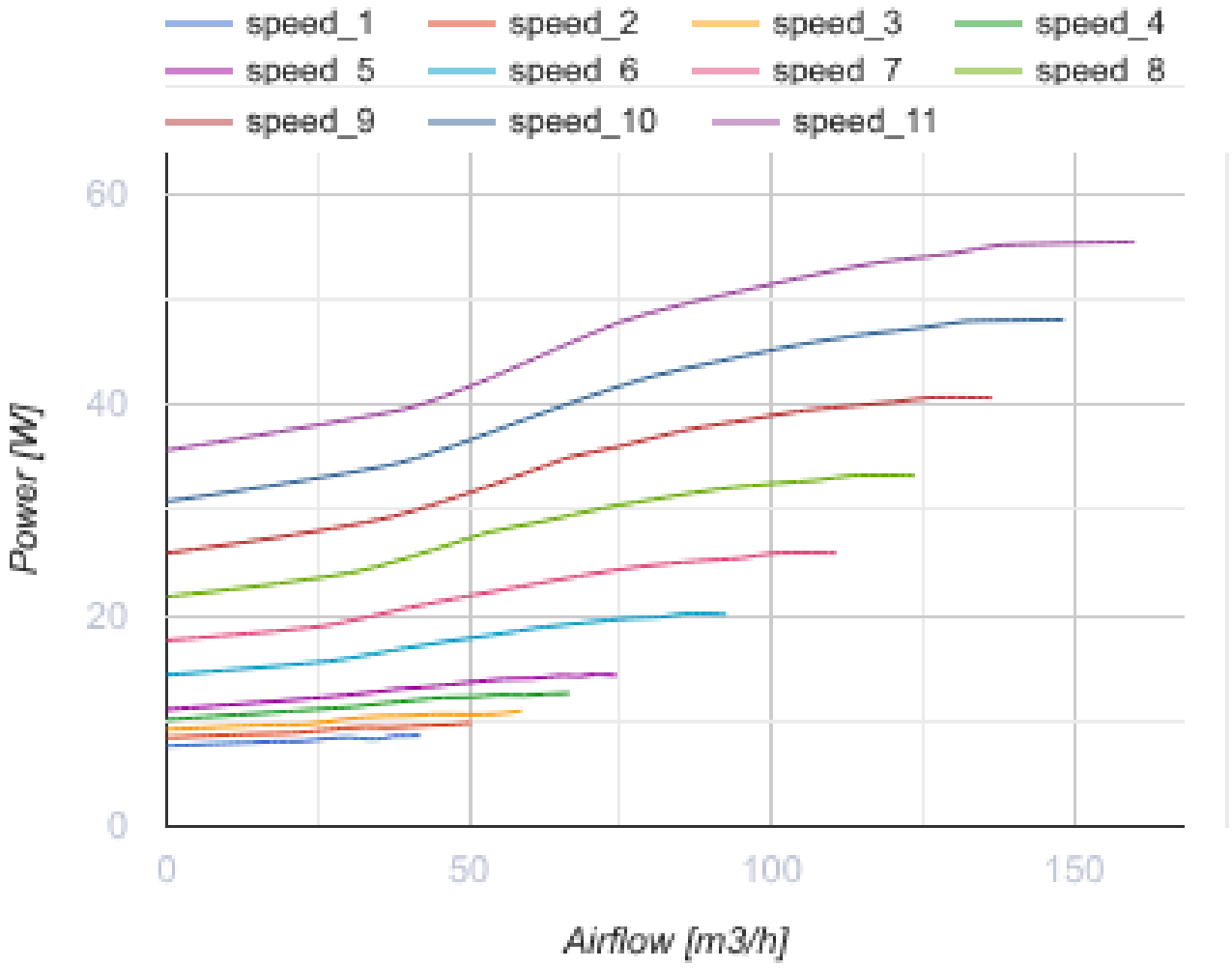
speed_1
speed_2
speed_3
speed_4
speed_5
speed_6
speed_7
speed_8
speed_9
speed_10
speed_11
60
40
20
0
Power [W]
0
50
100
150
Airflow [m3/h]

## Dimensions

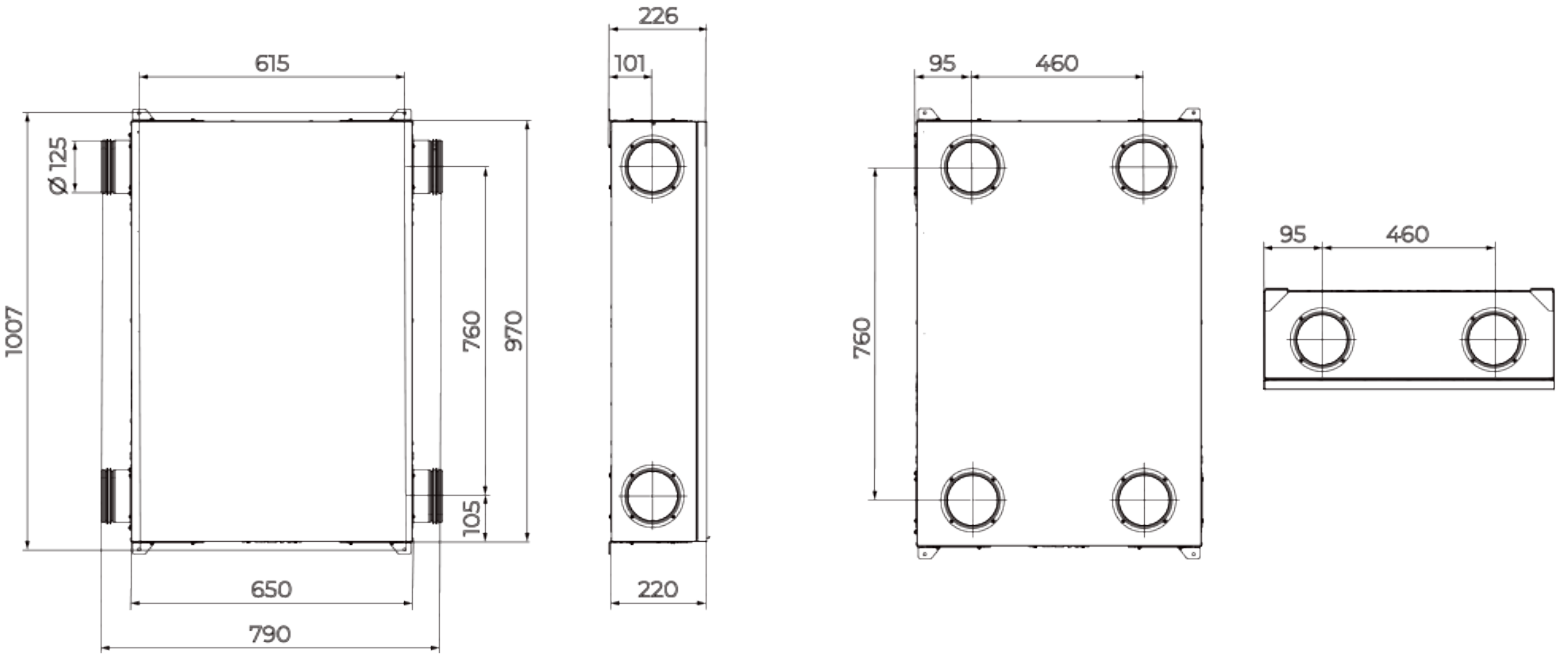


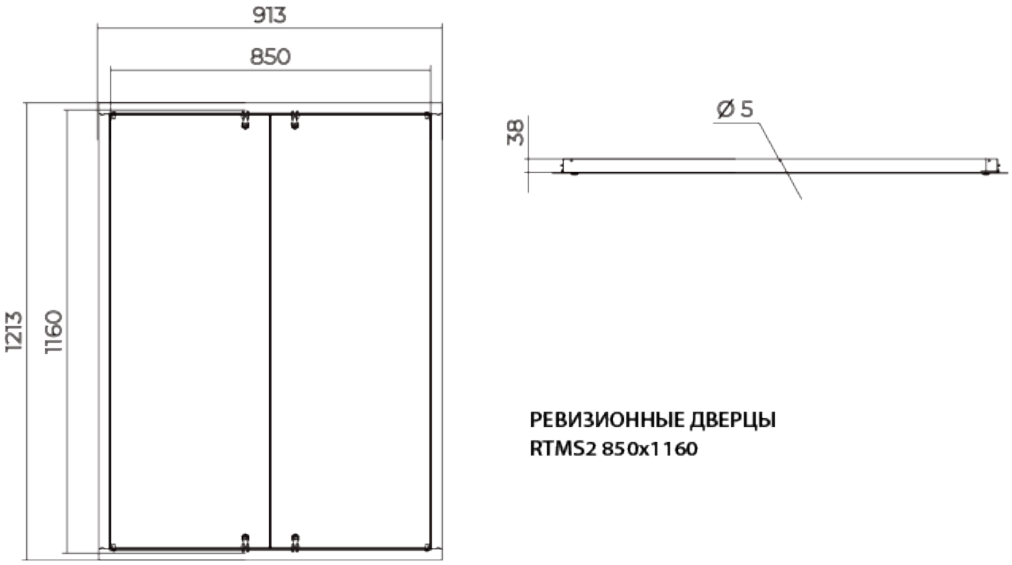


**РЕВИЗИОННЫЕ ДВЕРЦЫ**
**RTMS2 850x1160**

## Ecodesign

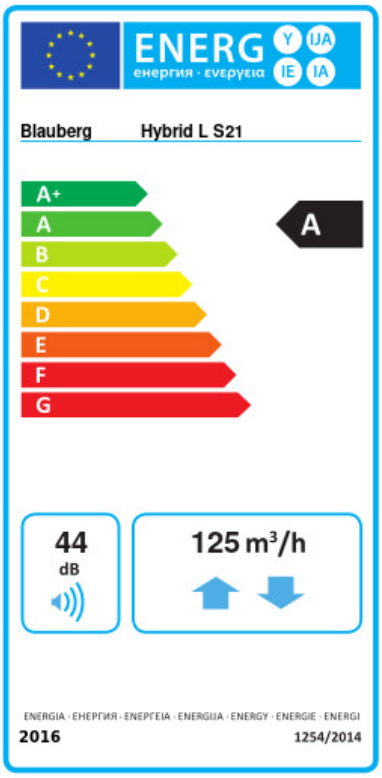


| Trademark | Blauberg | | | | | |
|---|---|---|---|---|---|---|
| Model | Hybrid L S21 | | | | | |
| Specific energy consumption (SEC) (kWh/(m²/a)) | Cold | | Average | | Warm | |
| | -78.8 | A+ | -41 | A | -16.8 | E |
| Type of ventilation unit | Bidirectional | | | | | |
| Type of drive installed | Variable speed | | | | | |
| Type of heat recovery system | Recuperative | | | | | |
| Thermal efficiency of heat recovery (%) | 81 | | | | | |
| Maximum flow rate (m³/h) | 125 | | | | | |
| Electric power input (W) | 52 | | | | | |
| Reference flow rate (m³/s) | 0.027 | | | | | |
| Reference pressure difference (Pa) | 50 | | | | | |
| Specific power input (SPI) (W/(m³/h)) | 0.271 | | | | | |
| Control typology | Local demand control | | | | | |
| Maximum internal leakage rates (%) | 2.7 | | | | | |
| Maximum external leakage rates (%) | 2.7 | | | | | |
| Airflow sensitivity at +20 Pa and -20 Pa (%) | 0 | | | | | |
| Declared typology | RVU BVU | | | | | |
| Sound power level (dB(A)) | 44 | | | | | |
| The annual electricity consumption (AEC) (kWh/a) | Cold | | Average | | Warm | |
| | 725 | | 188 | | 143 | |
| The annual heating saved (AHS) (kWh/a) | Cold | | Average | | Warm | |
| | 8817 | | 4507 | | 2038 | |