

Hybrid ERV L S14

Centralised ventilation unit for small apartments

- Sound-insulated casing
- CO2 sensor: Optional
- PM2.5 sensor: Optional

	Unit of measurement	Hybrid ERV L S14
Minimum supply voltage	V	230
Maximum supply voltage	V	230
Power supply frequency	Hz	50/60
Transported air temperature (max)	°C	40
Transported air temperature (min)	°C	-25
Minimum wall thickness	mm	70
Maximum wall thickness	mm	2000

Dimensions

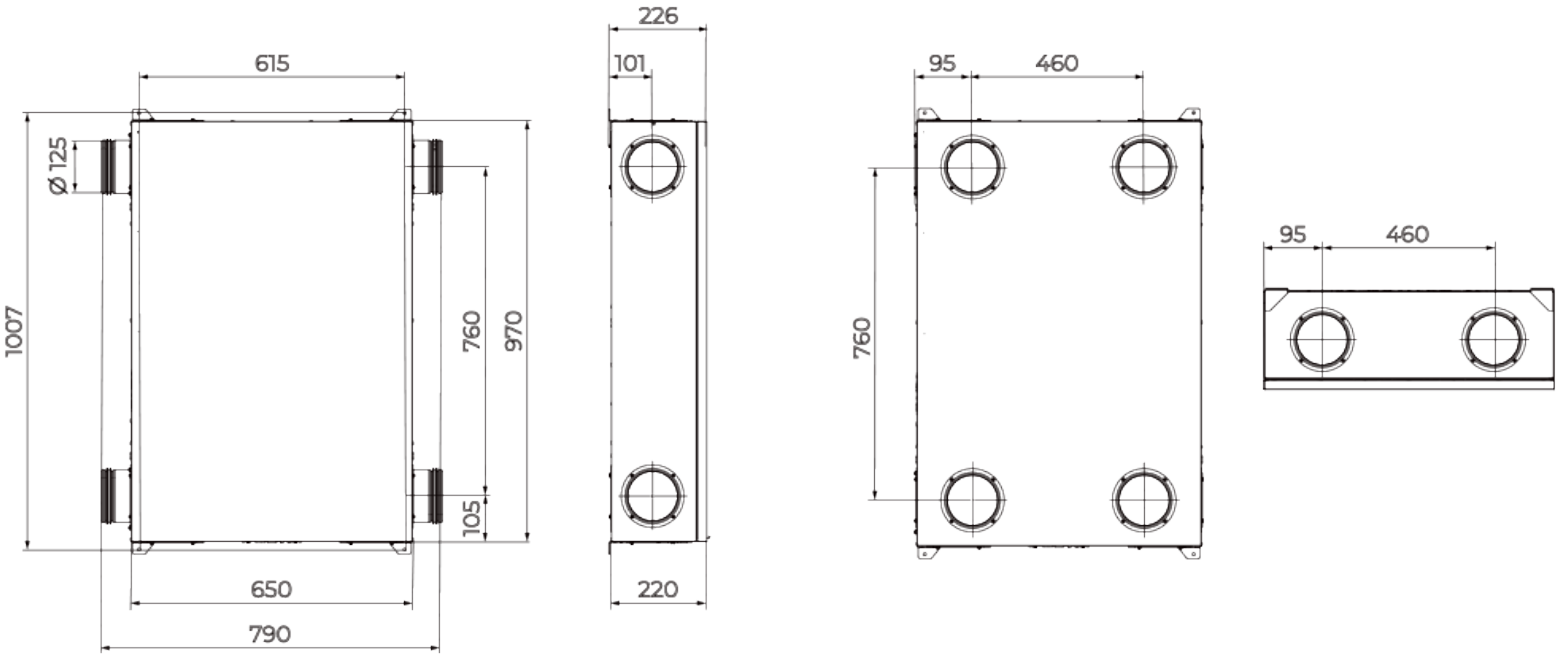

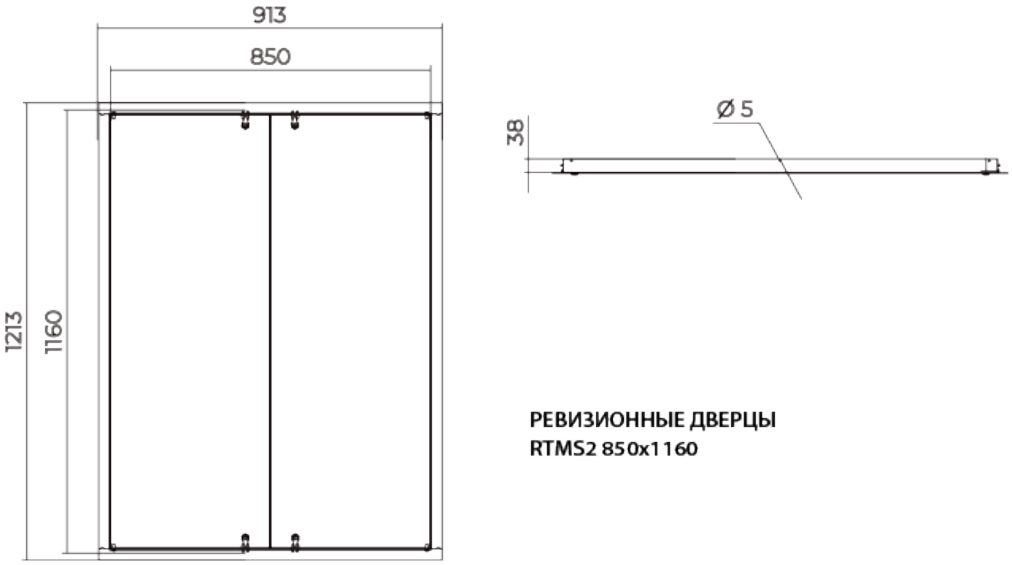

РЕВИЗИОННЫЕ ДВЕРЦЫ
RTMS2 850x1160