

Hybrid ERV L S14

Centralised ventilation unit for small apartments

- Sound pressure level LpA at 1 m: 42
- Heat exchanger type: Counter flow
- Heat exchanger material: Enthalpy
- Sound-insulated casing
- Enthalpy heat exchanger
- Bypass: Auto
- BMS protocol: ModBus
- Control: Smartphone, Built-in control panel, Wireless control panel
- Casing material: Galvanized steel
- Humidity sensor: Optional
- CO2 sensor: Optional
- PM2.5 sensor: Optional
- Temperature sensor: Built-in

	Unit of measurement	Hybrid ERV L S14		
Phases	-	1		
Minimum supply voltage	V	230		
Maximum supply voltage	V	230		
Power supply frequency	Hz	50/60		
Maximum airflow	m³/h	60	90	160
Sound pressure level LpA at 1 m	dB(A)	42		
Heat recovery efficiency, max	%	89		
Heat exchanger type	-	Counter flow		
Heat exchanger material	-	Enthalpy		
Weight	kg	31		
Transported air temperature (max)	°C	40		
Transported air temperature (min)	°C	-25		
Minimum wall thickness	mm	70		
Maximum wall thickness	mm	2000		

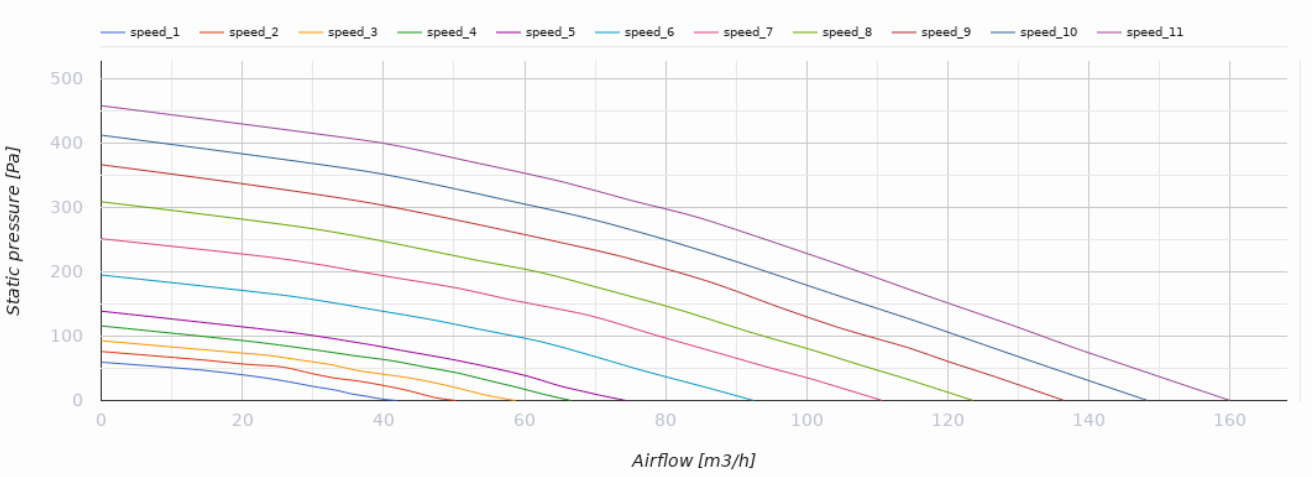
speed_1
speed_2
speed_3
speed_4
speed_5
speed_6
speed_7
speed_8
speed_9
speed_10
speed_11
Static pressure [Pa]
0
100
200
300
400
500
0
20
40
60
80
100
120
140
160
Airflow [m3/h]

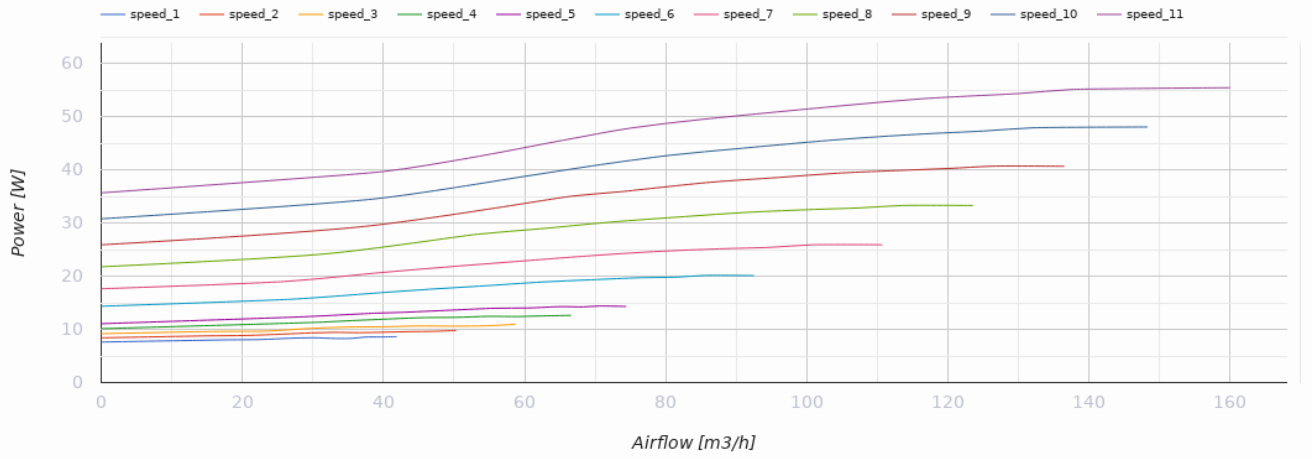
speed_1
speed_2
speed_3
speed_4
speed_5
speed_6
speed_7
speed_8
speed_9
speed_10
speed_11
Power [W]
0
10
20
30
40
50
60
0
20
40
60
80
100
120
140
160
Airflow [m3/h]

Dimensions

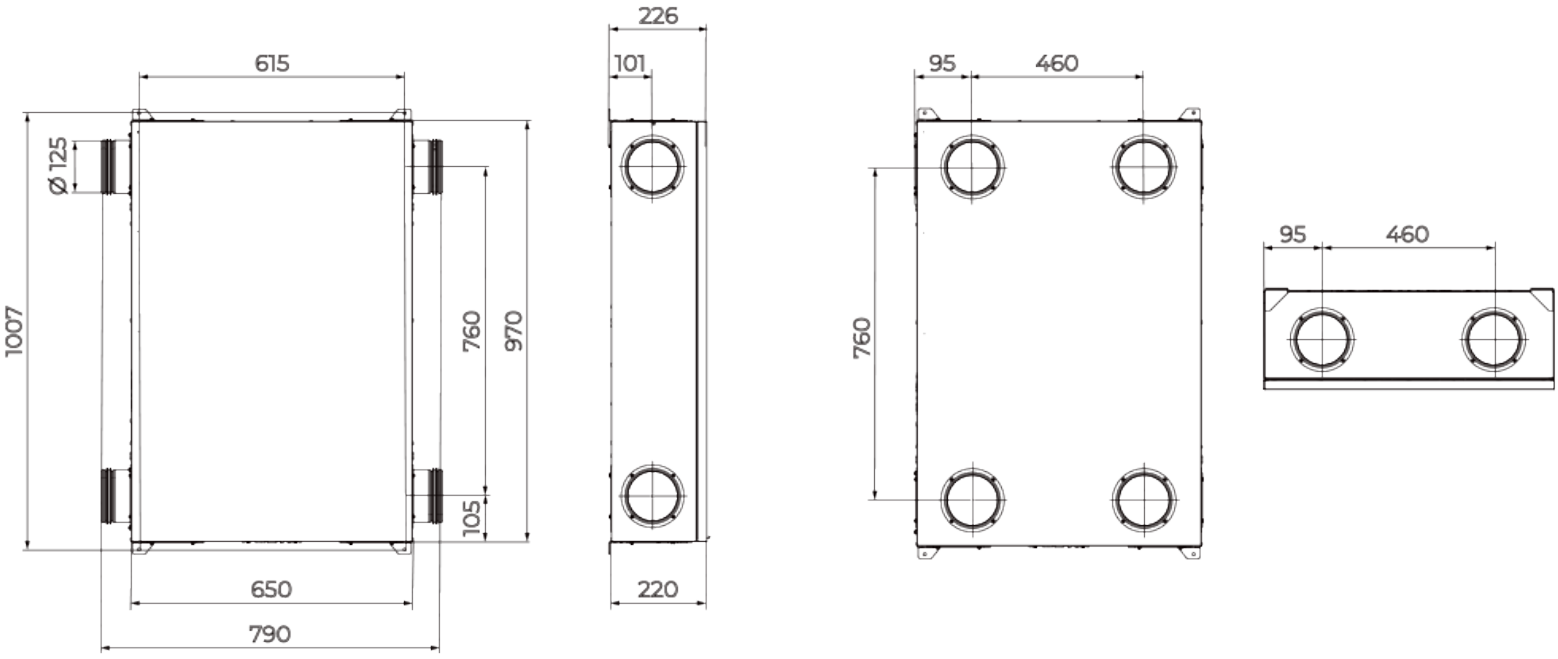

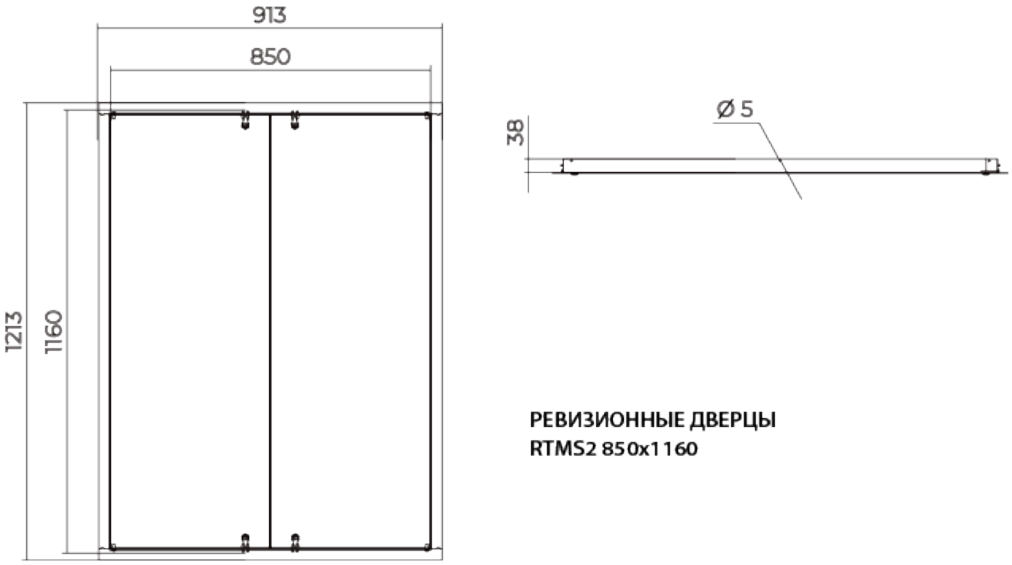

РЕВИЗИОННЫЕ ДВЕРЦЫ
RTMS2 850x1160