

Helix 250x140 4E

Radial fans

• Impeller type: Centrifugal impeller with forward curved blades
• Casing material: Coated steel

	Unit of measurement	Helix 250x140 4E
Phases	-	1
Maximum supply voltage	V	230
Minimum supply voltage	V	230
Power supply frequency	Hz	50
Maximum airflow	m³/h	2000
Weight	kg	16.3
Transported air temperature (max)	°C	70
Transported air temperature (min)	°C	-40
Ingress protection rating	-	IPX4
Ingress protection rating of the drive	-	IP44
Impeller material	-	Galvanized steel

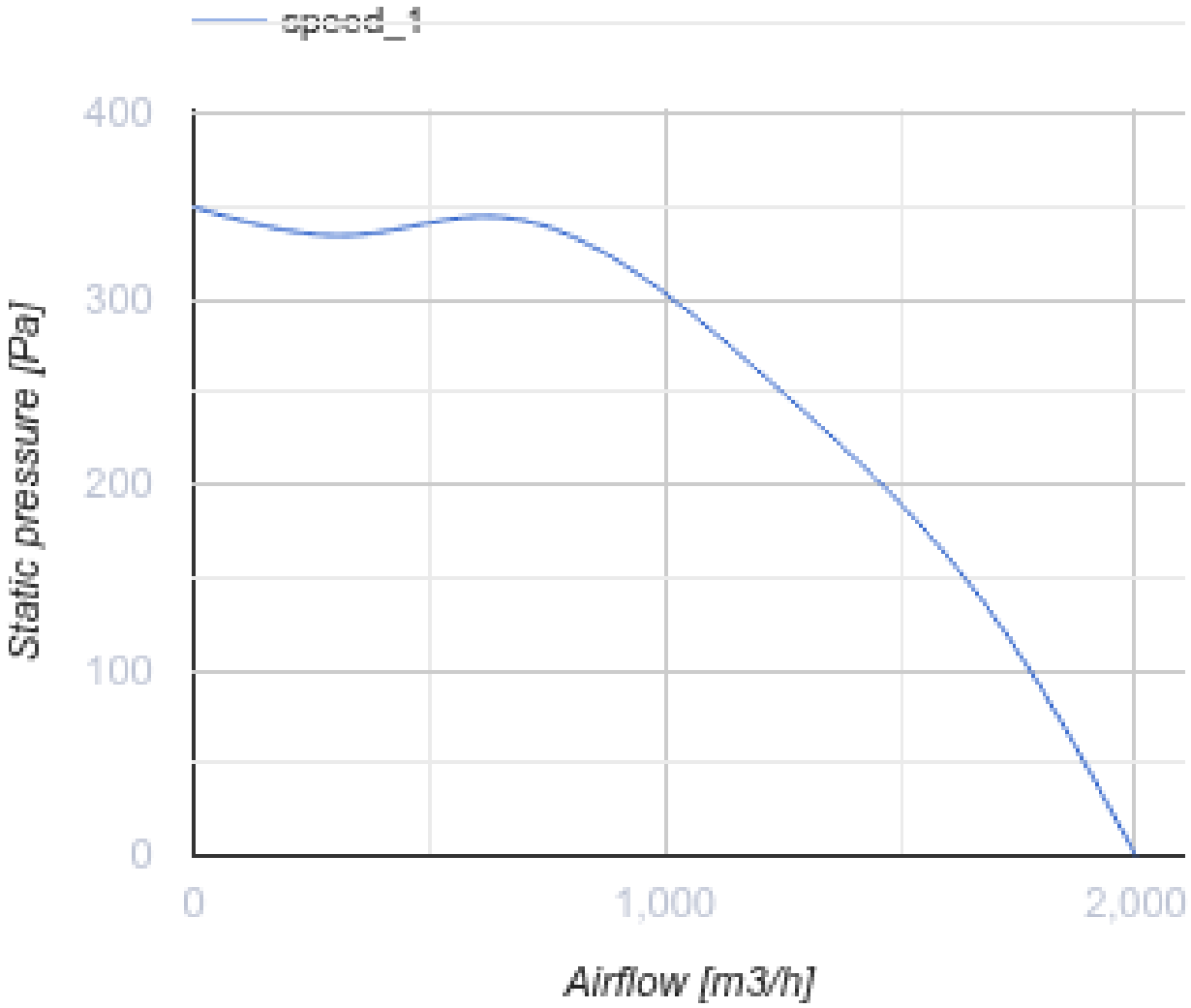
speed_1
400
300
200
100
0
Static pressure [Pa]
0
1,000
2,000
Airflow [m3/h]

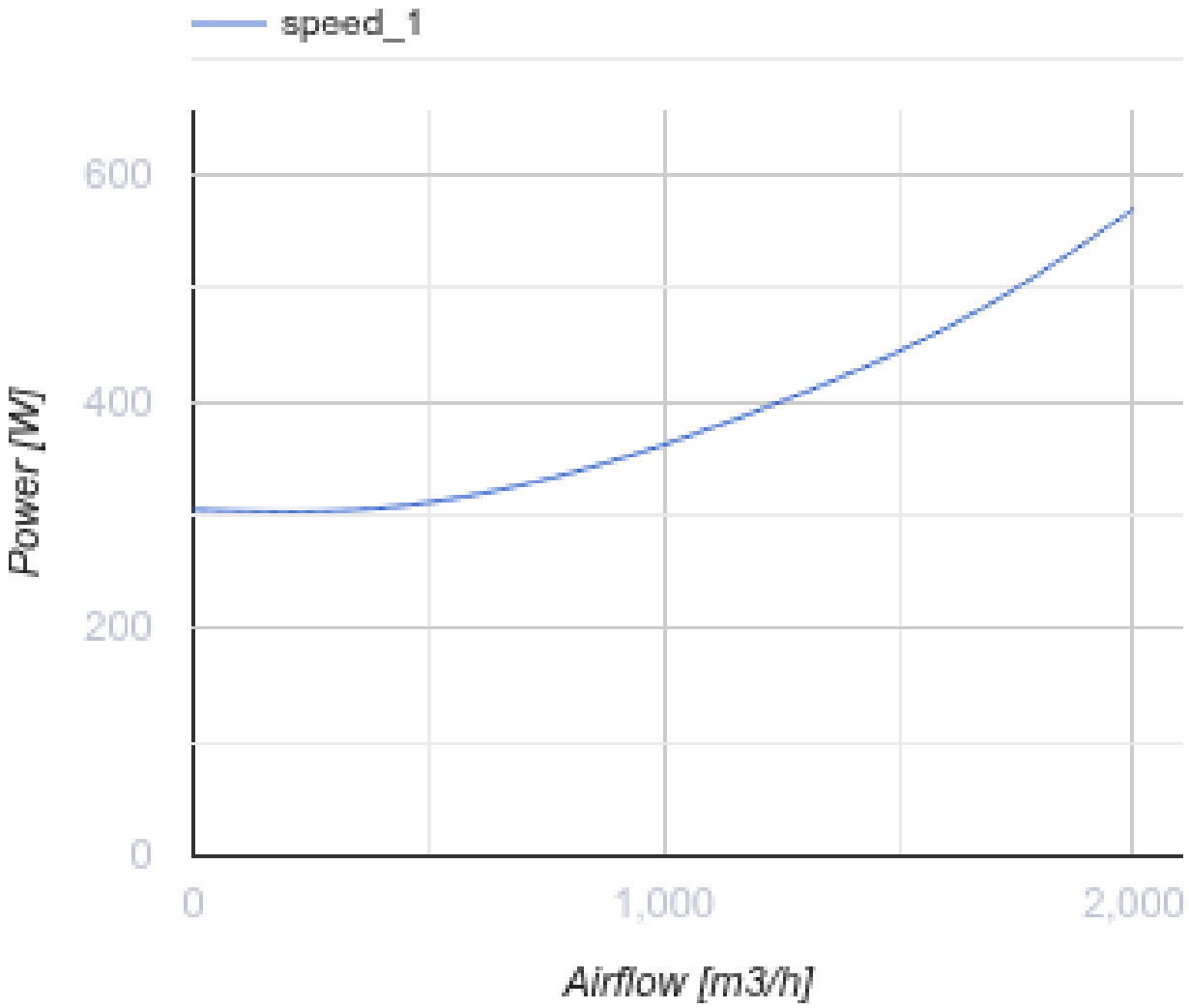

Dimensions

Ø D	B	H	H1	H2	L	L1	L2	P	M
250	410	485	230	191	205	230	197	238	270

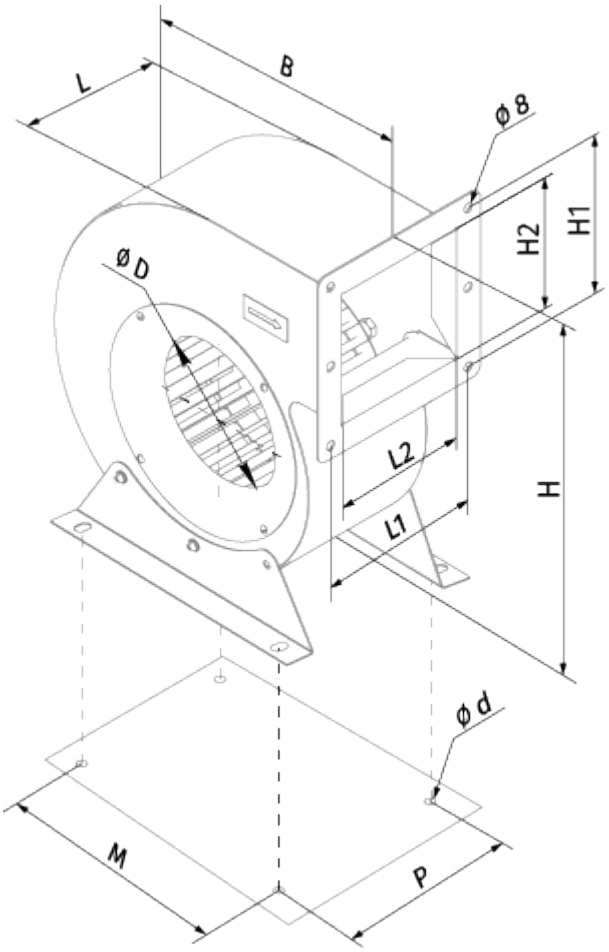
L
B
ϕ 8
H2
H1
ØD
L2
H
L1
ϕ d
M
P

Ecodesign

Trademark	Blauberg
Model	Helix 250x140 4E
Type of ventilation unit	Unidirectional
Type of drive installed	External MSD or VSD
Type of heat recovery system	None
Nominal external pressure (Pa)	286
Maximum external leakage rates (%)	2.7
Static efficiency (%)	22.7
Declared typology	NRVU UVU
Sound power level (dB(A))	80
Effective electric power input (kW)	0.389

Accessories

Speed controllers

Name	Photo	Description
CDT E1.8		Thyristor speed controller