

Helix 225x102 4E

Radial fans

• Impeller type: Centrifugal impeller with forward curved blades
• Casing material: Coated steel

	Unit of measurement	Helix 225x102 4E
Phases	-	1
Maximum supply voltage	V	230
Minimum supply voltage	V	230
Power supply frequency	Hz	50
Maximum airflow	m³/h	1480
Weight	kg	11.9
Transported air temperature (max)	°C	70
Transported air temperature (min)	°C	-40
Ingress protection rating	-	IPX4
Ingress protection rating of the drive	-	IP44
Impeller material	-	Galvanized steel

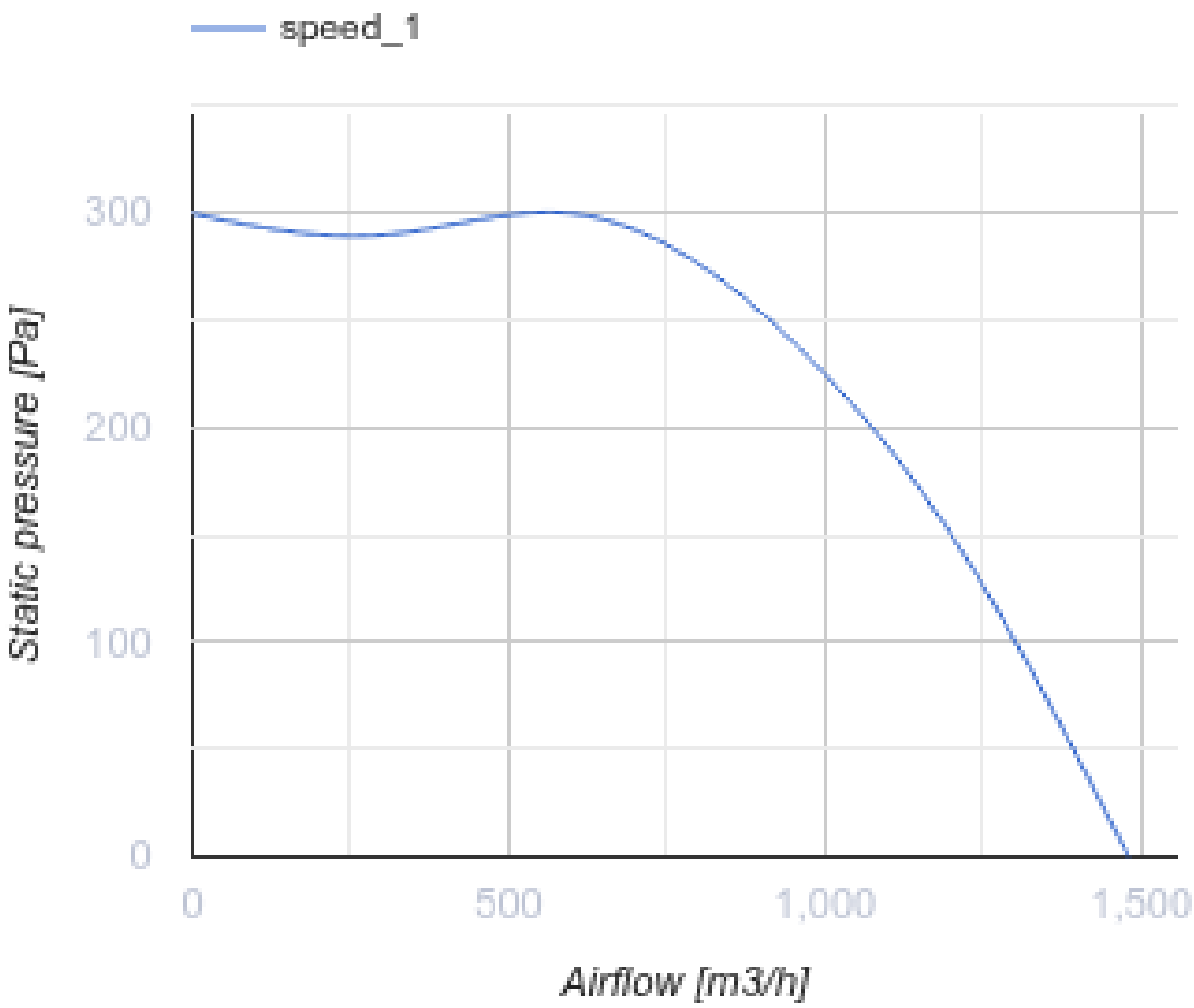
speed_1
300
200
100
0
Static pressure [Pa]
0
500
1,000
1,500
Airflow [m3/h]

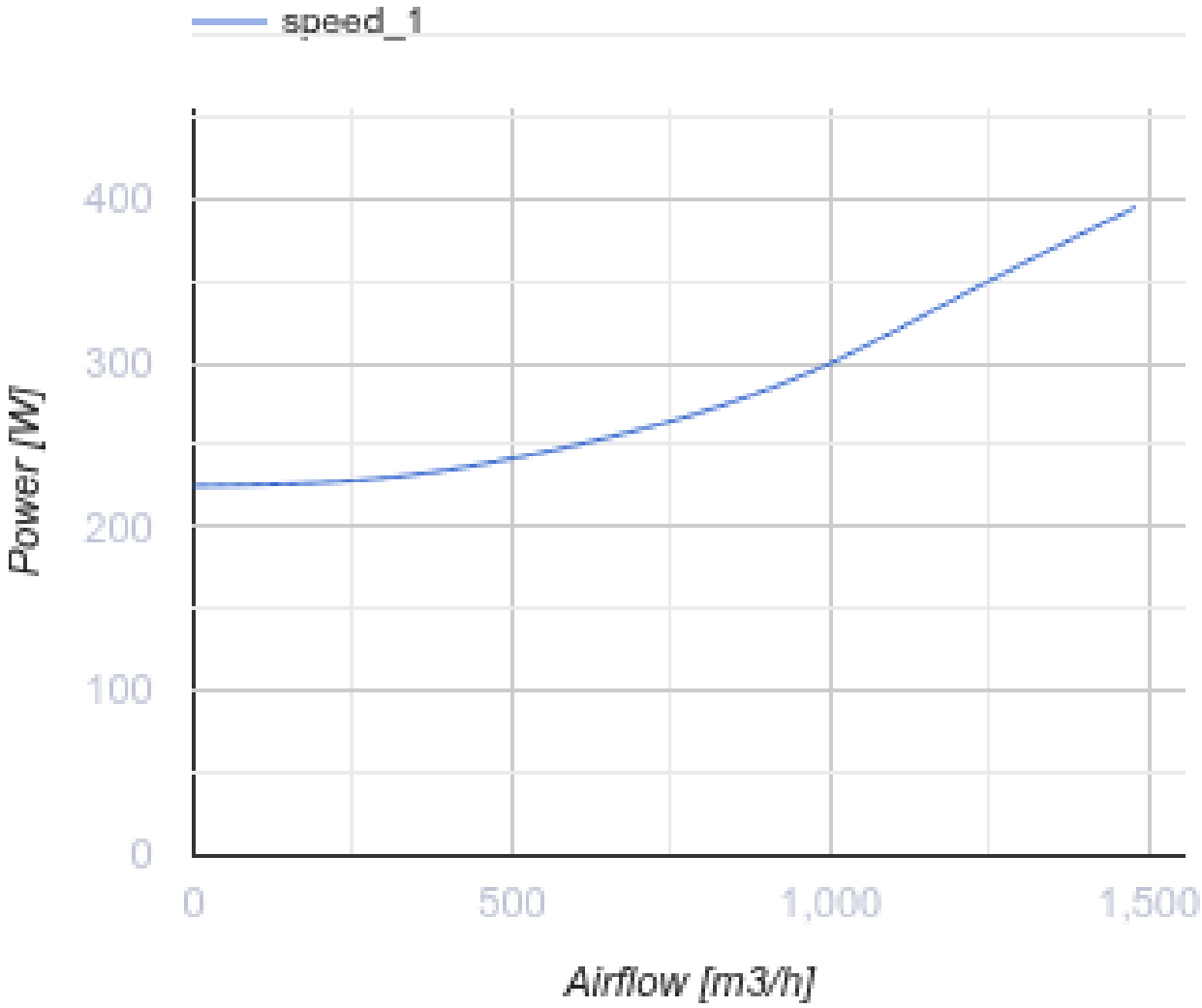

Dimensions

Ø D	B	H	H1	H2	L	L1	L2	P	M
225	365	441	210	171	145	170	137	178	250

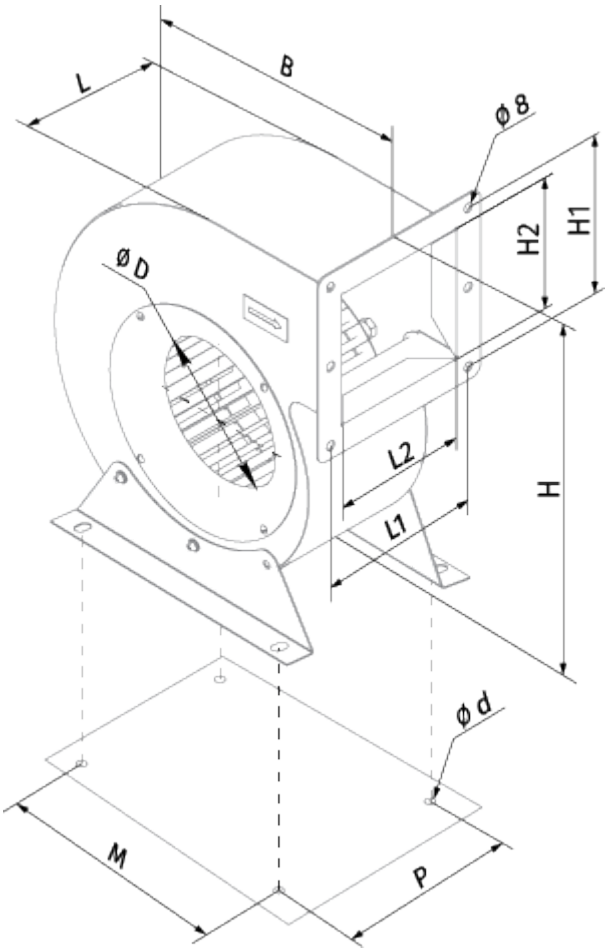
L
B
ϕ 8
H2
H1
ØD
L2
H
L1
ϕ d
M
P

Ecodesign

Trademark	Blauberg
Model	Helix 225x102 4E
Type of ventilation unit	Unidirectional
Type of drive installed	External MSD or VSD
Type of heat recovery system	None
Nominal external pressure (Pa)	270
Maximum external leakage rates (%)	2.7
Static efficiency (%)	23.1
Sound power level (dB(A))	89
Declared typology	NRVU UVU
Effective electric power input (kW)	0.275

Accessories

Speed controllers

Name	Photo	Description
CDT E1.8		Thyristor speed controller