

Helix 200x80 4E

Radial fans

• Impeller type: Centrifugal impeller with forward curved blades
• Casing material: Coated steel

	Unit of measurement	Helix 200x80 4E
Phases	-	1
Maximum supply voltage	V	230
Minimum supply voltage	V	230
Power supply frequency	Hz	50
Maximum airflow	m³/h	730
Weight	kg	7.5
Transported air temperature (max)	°C	45
Transported air temperature (min)	°C	-25
Ingress protection rating	-	IPX4
Ingress protection rating of the drive	-	IP44
Impeller material	-	Galvanized steel

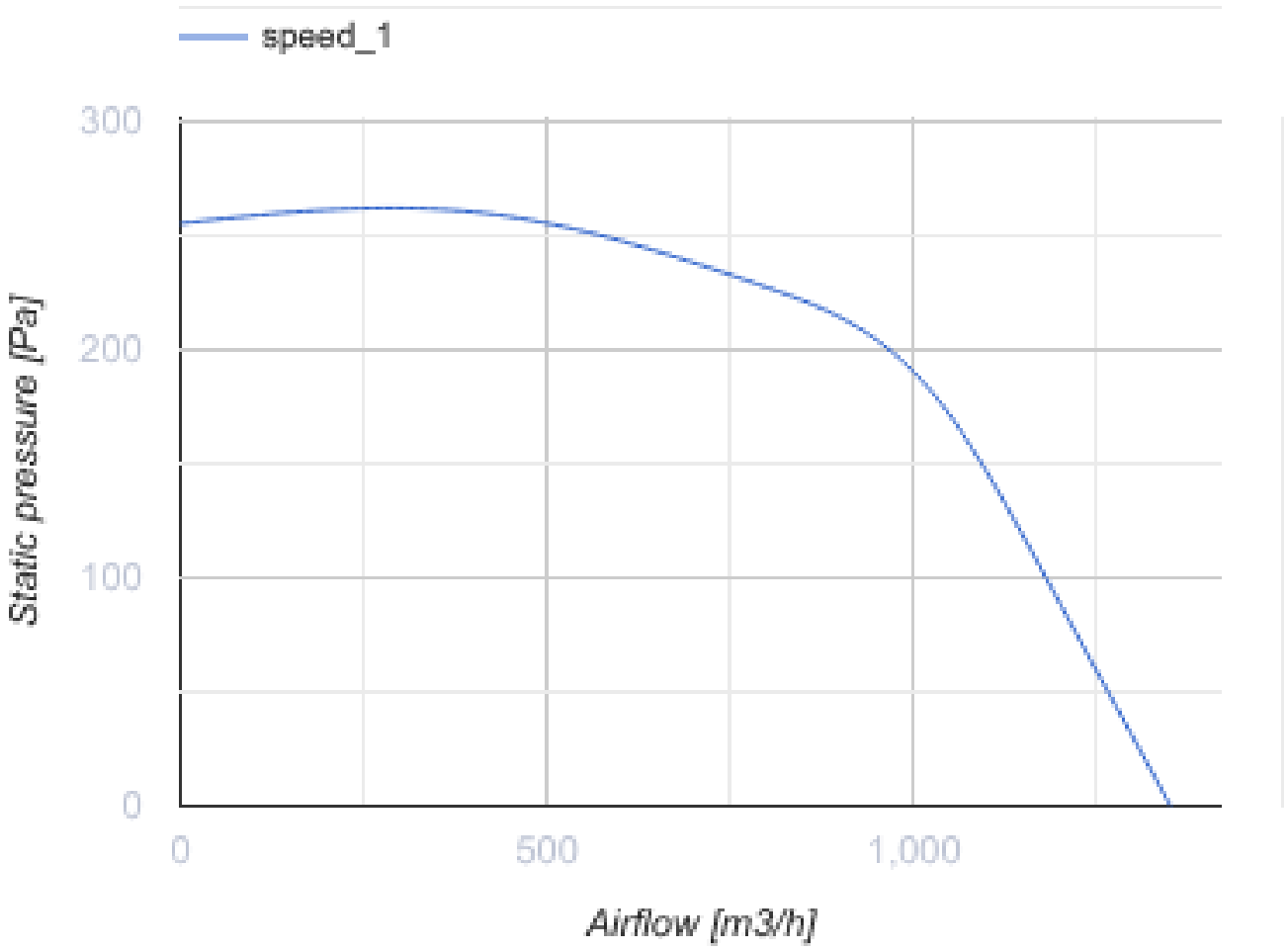
speed_1
300
200
100
0
Static pressure [Pa]
0
500
1,000
Airflow [m3/h]

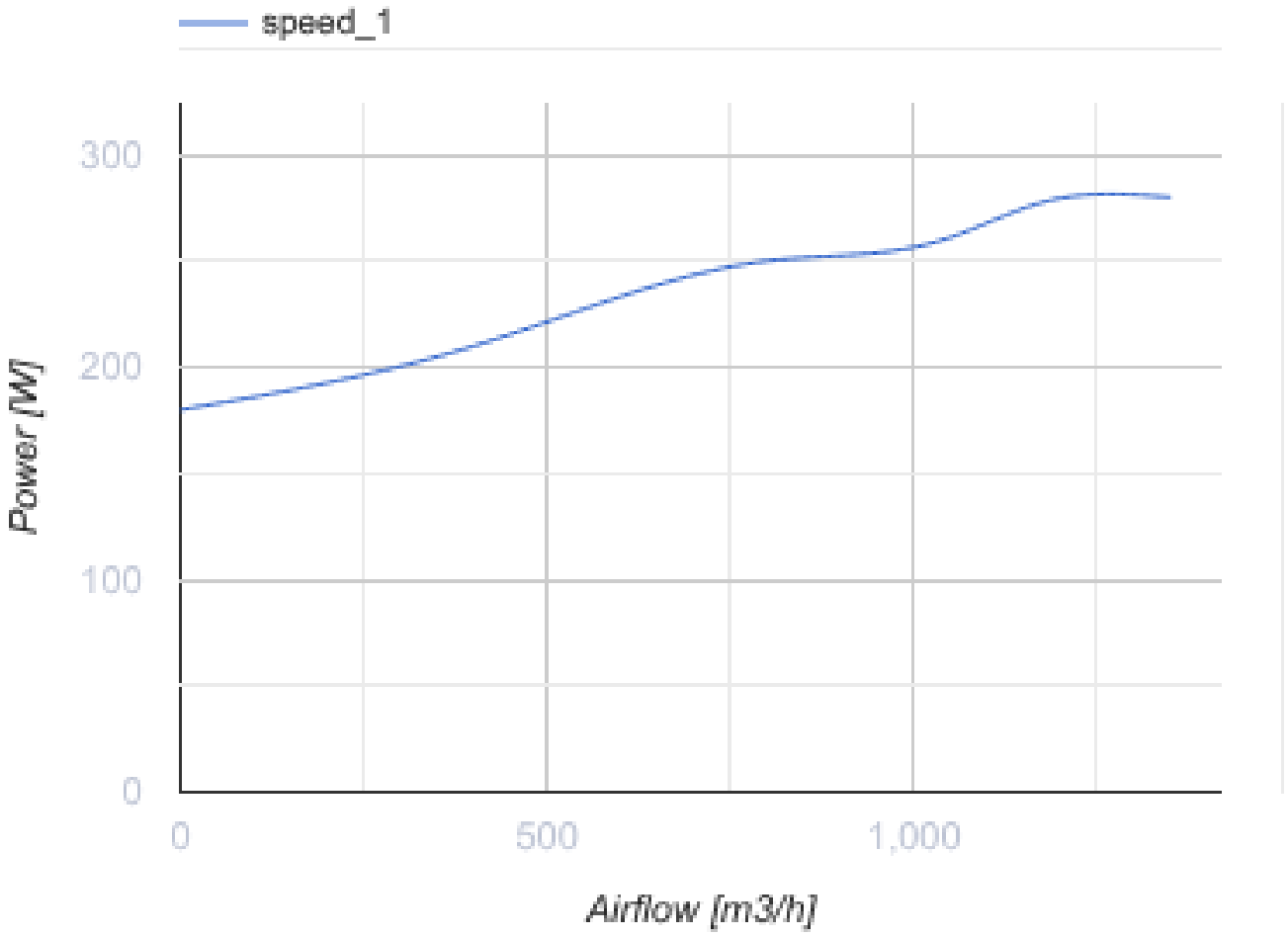

Dimensions

Ø D	B	H	H1	H2	L	L1	L2
200	335	398	165	134	121	140	113

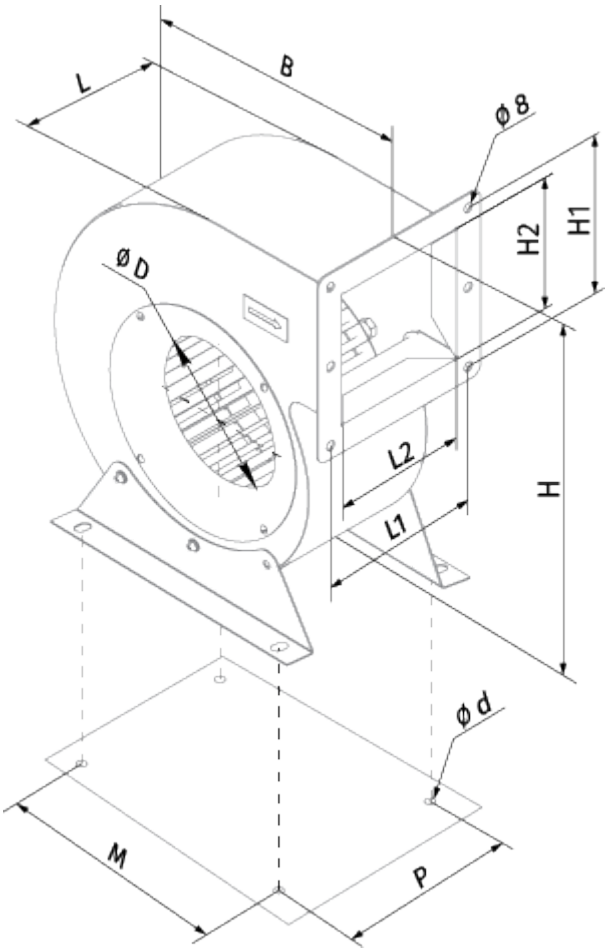
L
B
ϕ 8
H2
H1
ØD
L2
H
L1
ϕ d
M
P

Ecodesign

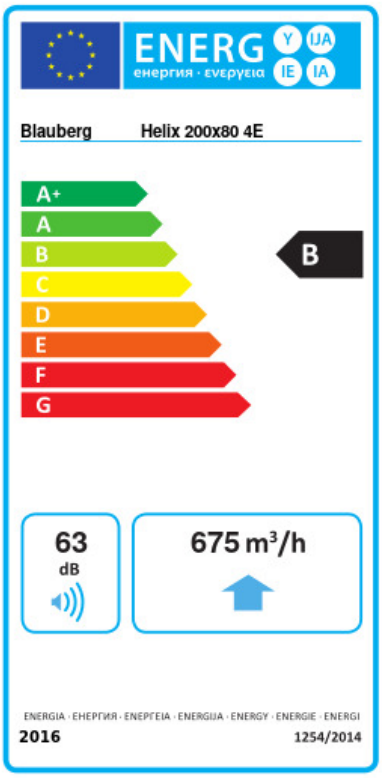

Trademark	Blauberg					
Model	Helix 200x80 4E					
Specific energy consumption (SEC) (kWh/(m²/a))	Cold		Average		Warm	
	-53.4	A+	-26.4	B	-10.9	E
Type of ventilation unit	Unidirectional					
Type of drive installed	Variable speed					
Type of heat recovery system	None					
Maximum flow rate (m³/h)	675					
Electric power input (W)	125					
Reference flow rate (m³/s)	0.131					
Reference pressure difference (Pa)	50					
Specific power input (SPI) (W/(m³/h))	0.146					
Control typology	Local demand control					
Maximum external leakage rates (%)	2.7					
Declared typology	RVU UVU					
Sound power level (dB(A))	63					
The annual electricity consumption (AEC) (kWh/a)	Cold		Average		Warm	
	77		77		77	
The annual heating saved (AHS) (kWh/a)	Cold		Average		Warm	
	5536		2830		1280	

Accessories

Speed controllers

Name	Photo	Description
CDT E1.8		Thyristor speed controller