

Helix 200x102 4E

Radial fans

• Impeller type: Centrifugal impeller with forward curved blades
• Casing material: Coated steel

	Unit of measurement	Helix 200x102 4E
Phases	-	1
Maximum supply voltage	V	230
Minimum supply voltage	V	230
Power supply frequency	Hz	50
Maximum airflow	m³/h	1350
Weight	kg	8
Transported air temperature (max)	°C	40
Transported air temperature (min)	°C	-25
Ingress protection rating	-	IPX4
Ingress protection rating of the drive	-	IP44
Impeller material	-	Galvanized steel

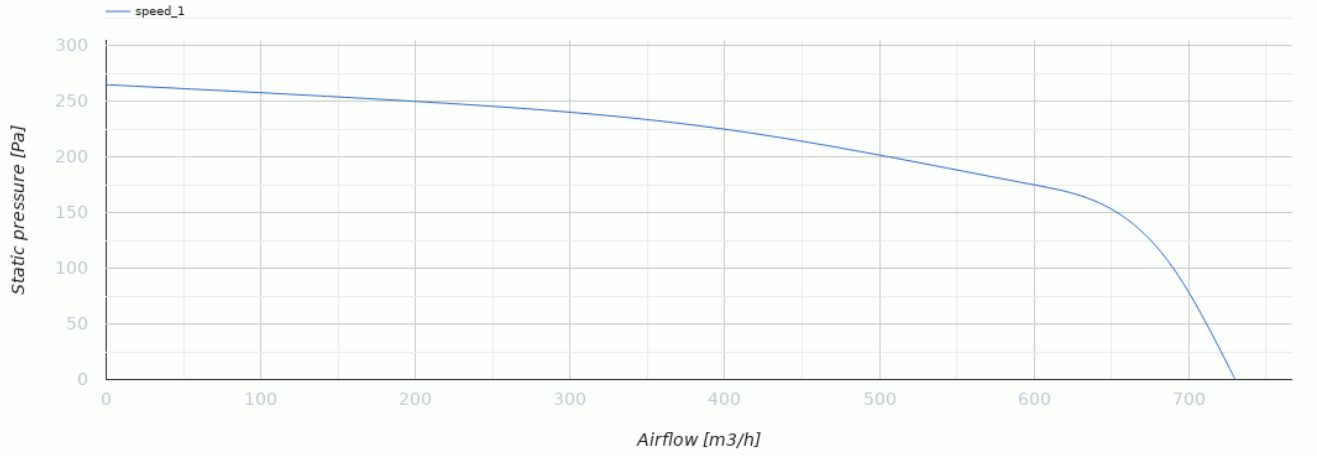

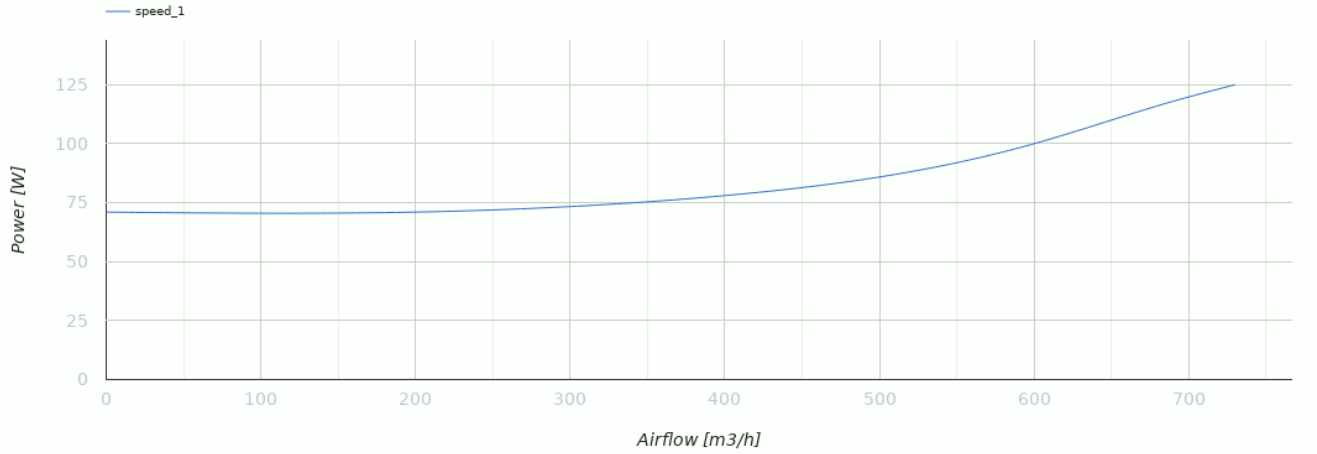

Dimensions

Ø D	B	H	H1	H2	L	L1	L2
200	335	398	165	134	157	175	148

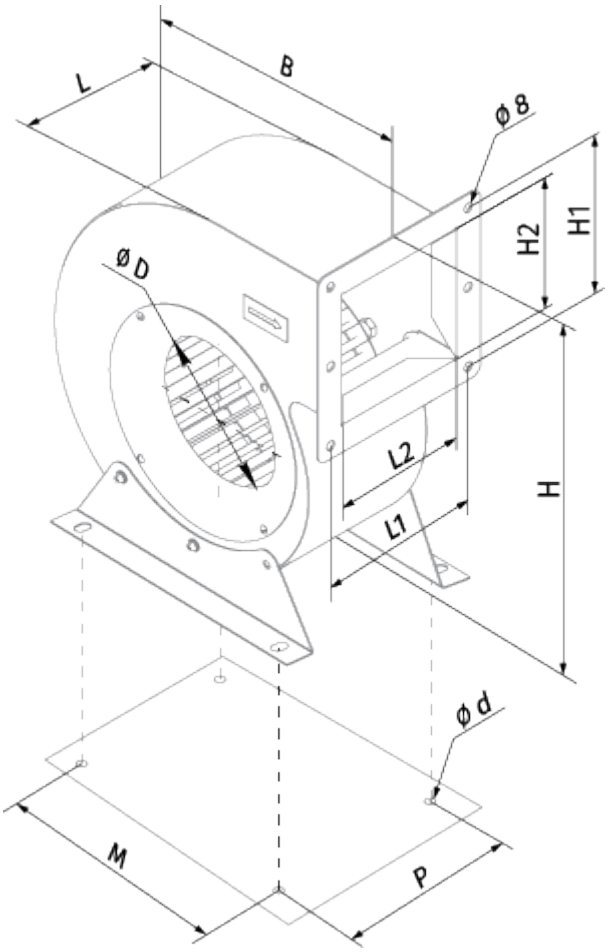
L
B
ϕ 8
H2
H1
ØD
L2
H
L1
ϕ d
M
P

Ecodesign

Trademark	Blauberg
Model	Helix 200x102 4E
Type of ventilation unit	Unidirectional
Type of drive installed	External MSD or VSD
Type of heat recovery system	None
Nominal external pressure (Pa)	206
Maximum external leakage rates (%)	2.7
Static efficiency (%)	21
Effective electric power input (kW)	0.252
Sound power level (dB(A))	85
Declared typology	NRVU UVU

Accessories

Speed controllers

Name	Photo	Description
CDT E1.8		Thyristor speed controller