

Helix 160x62 2E

Radial fans

• Impeller type: Centrifugal impeller with forward curved blades
• Casing material: Coated steel

	Unit of measurement	Helix 160x62 2E
Phases	-	1
Maximum supply voltage	V	230
Minimum supply voltage	V	230
Power supply frequency	Hz	50
Maximum airflow	m³/h	560
Weight	kg	4.8
Transported air temperature (max)	°C	50
Transported air temperature (min)	°C	-25
Ingress protection rating	-	IPX4
Ingress protection rating of the drive	-	IP44
Impeller material	-	Galvanized steel

Dimensions

Ø D	B	H	H1	H2	L	L1	L2
160	277	324	136	106	106	130	98

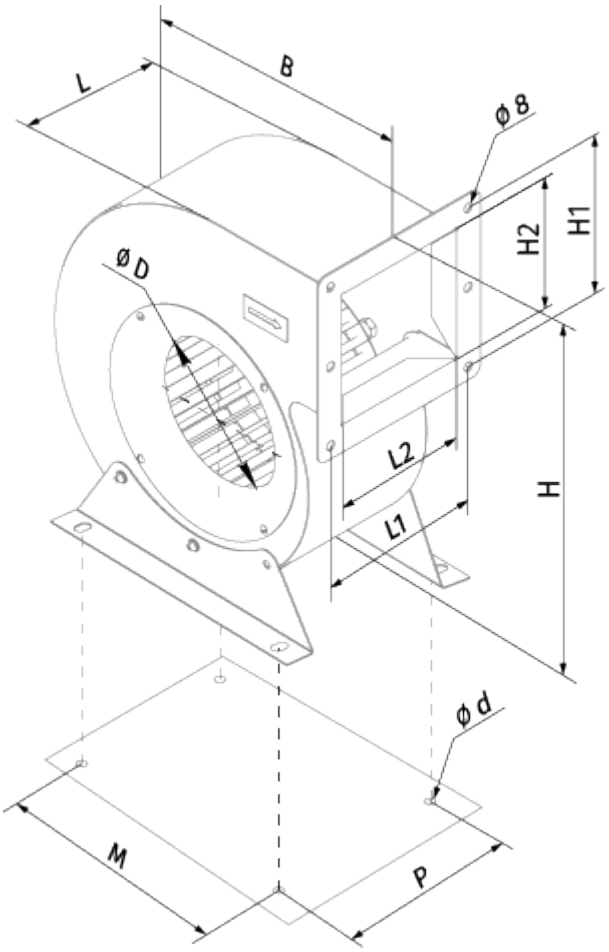

Accessories

Speed controllers

Name	Photo	Description
CDT E1.8		Thyristor speed controller