

Fresher 50

Wall vent for natural supply ventilation

- Sound pressure level LpA at 1 m: 32

	Unit of measurement	Fresher 50		
Phases	-	1		
Minimum supply voltage	V	100		
Maximum supply voltage	V	240		
Power supply frequency	Hz	50/60		
Maximum airflow	m³/h	20	35	50
Sound pressure level LpA at 1 m	dB(A)	22	29	32
Ambient air temperature min	°C	-30		
Ambient air temperature max	°C	50		
Ingress protection rating	-	IP24		

Dimensions

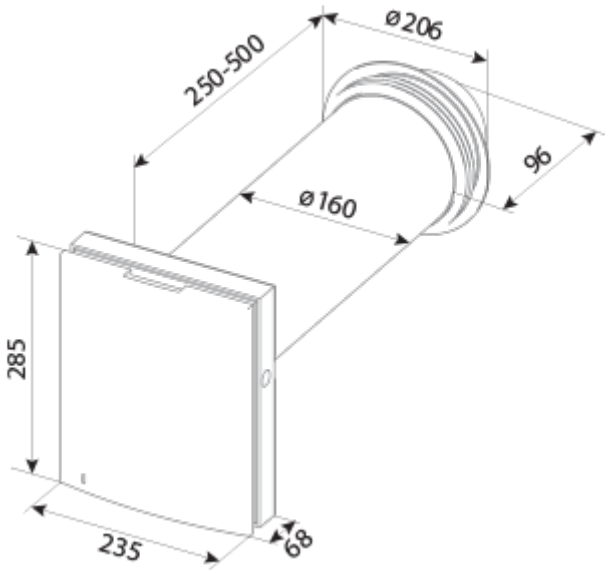
250-500
Ø206
96
Ø160
285
235
68

Ecodesign

Trademark	Blauberg					
Model	Fresher 50					
Specific energy consumption (SEC) (kWh/(m²/a))	Cold		Average		Warm	
	-53.2	A+	-26.1	B	-10.6	E
Type of ventilation unit	Unidirectional					
Type of drive installed	Multi-speed					
Type of heat recovery system	None					
Maximum flow rate (m³/h)	50					
Electric power input (W)	6.6					
Reference flow rate (m³/s)	0.01					
Specific power input (SPI) (W/(m³/h))	0.134					
Control typology	Local demand control					
Maximum external leakage rates (%)	2.7					
Sound power level (dB(A))	40					
The annual electricity consumption (AEC) (kWh/a)	Cold		Average		Warm	
	88		88		88	
The annual heating saved (AHS) (kWh/a)	Cold		Average		Warm	
	5536		2830		1280	