

# Freshbox E2-100 WiFi

Single-room air handling units

- Power of electrical preheater: 700
- Power of electrical reheater: 350
- Heat exchanger type: Counter flow
- Heat exchanger material: Polystyrene
- Sound-insulated casing
- Reheater: Electric
- Preheater: Electric
- Control: Built-in control panel, Smartphone
- Casing material: Coated steel
- Temperature sensor: Built-in

| | Unit of measurement | Freshbox E2-100 WiFi | | | | |
|---|---|---|---|---|---|---|
| Phases | - | 1 | | | | |
| Minimum supply voltage | V | 230 | | | | |
| Maximum supply voltage | V | 230 | | | | |
| Power supply frequency | Hz | 50/60 | | | | |
| Power of electrical preheater | W | 700 | | | | |
| Power of electrical reheater | W | 350 | | | | |
| Maximum airflow | m³/h | 30 | 44 | 60 | 75 | 100 |
| Heat recovery efficiency | % | 98 | 95 | 92 | 90 | 89 |
| Heat exchanger type | - | Counter flow | | | | |
| Heat exchanger material | - | Polystyrene | | | | |
| Weight | kg | 31 | | | | |
| Transported air temperature (max) | °C | 40 | | | | |
| Transported air temperature (min) | °C | -20 | | | | |
| Ambient air temperature min | °C | 1 | | | | |
| Ambient air temperature max | °C | 40 | | | | |
| Ingress protection rating | - | IP22 | | | | |
| Ingress protection rating of the drive | - | IP44 | | | | |
| Ambient air humidity max | % | 70 | | | | |
| Minimum wall thickness | mm | 50 | | | | |
| Maximum wall thickness | mm | 2000 | | | | |

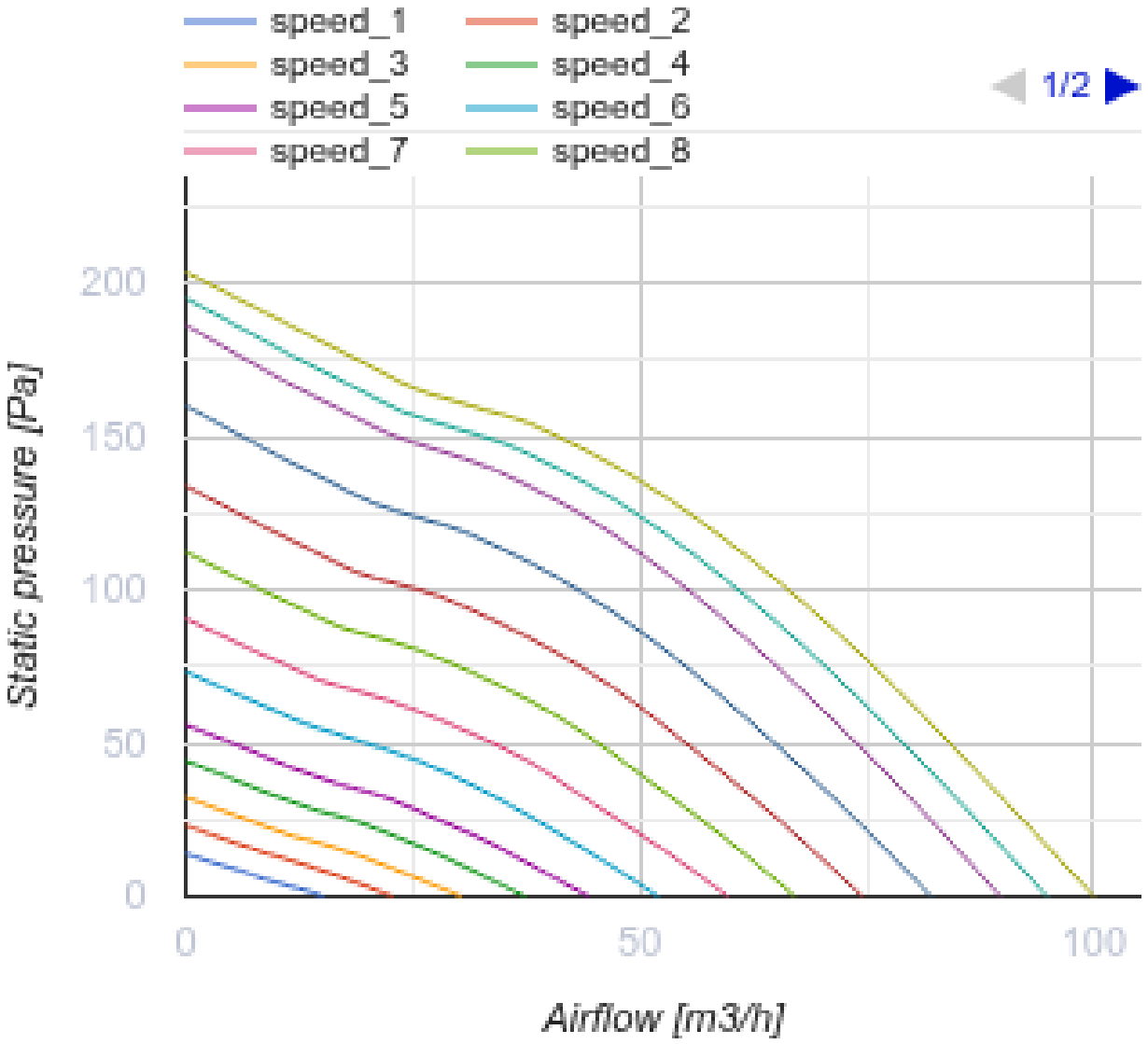
speed_1
speed_2
speed_3
speed_4
speed_5
speed_6
speed_7
speed_8
1/2
Static pressure [Pa]
200
150
100
50
0
0
50
100
Airflow [m3/h]

## Dimensions

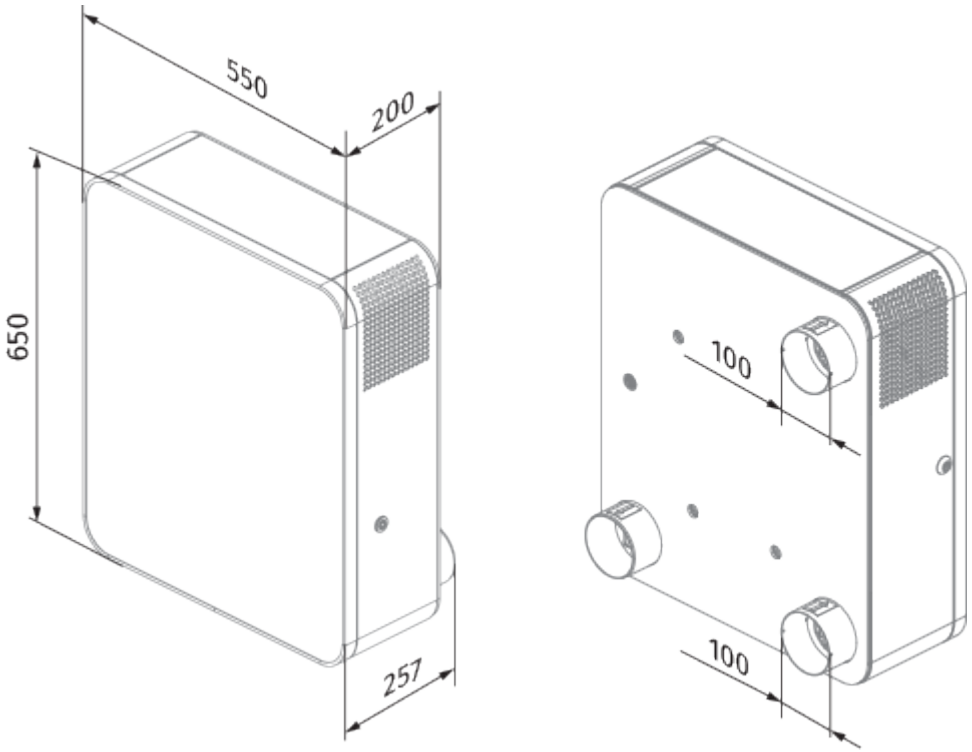


## Accessories

### CO2 sensors

| Name | Photo | Description |
|---|---|---|
| CD-1 |  | CO2 sensors |
| CD-2 |  | CO2 sensors |

### Other accessories

| Name | Photo | Description |
|---|---|---|
| MS Freshbox 100 chrome |  | |
| MS Freshbox 100 white | 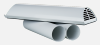 | |
| EH Freshbox 100 |  | Electric heater |

| | | |
|---|---|---|
| FP 193x158x47 F8 |  | F8 filter |
| FP 193x158x47 F8 C |  | F8 carbon filter |
| FP 193x158x18 G4 PPI |  | G4 panel filter |
| FP 193x158x47 H13 |  | Supply HEPA H13 panel filter |

### Hoods

| Name | Photo | Description |
|---|---|---|
| AH Freshbox 100 chrome |  | |
| AH Freshbox 100 white |  | |

### Humidity sensors

| Name | Photo | Description |
|---|---|---|
| HR-S |  | Electro-mechanical humidistat |