

Freshbox E-100 black

Single-room air handling units

• Power of electrical preheater: 700
• Heat exchanger type: Counter flow
• Heat exchanger material: Polystyrene
• Sound-insulated casing
• Bypass: Auto
• Preheater: Electric
• Control: Built-in control panel, Wired control panel, Remote Control
• Casing material: Coated steel
• Temperature sensor: Built-in

	Unit of measurement	Freshbox E-100 black		
Phases	-	1		
Minimum supply voltage	V	230		
Maximum supply voltage	V	230		
Power supply frequency	Hz	50/60		
Power of electrical preheater	W	700		
Maximum airflow	m³/h	30	60	100
Heat recovery efficiency	%	98	92	89
Heat recovery efficiency, max	%	98		
Heat exchanger type	-	Counter flow		
Heat exchanger material	-	Polystyrene		
Weight	kg	31		
Transported air temperature (max)	°C	40		
Transported air temperature (min)	°C	-20		
Ambient air temperature min	°C	1		
Ambient air temperature max	°C	40		
Ingress protection rating	-	IP22		
Ingress protection rating of the drive	-	IP44		
Ambient air humidity max	%	70		
Minimum wall thickness	mm	50		
Maximum wall thickness	mm	2000		

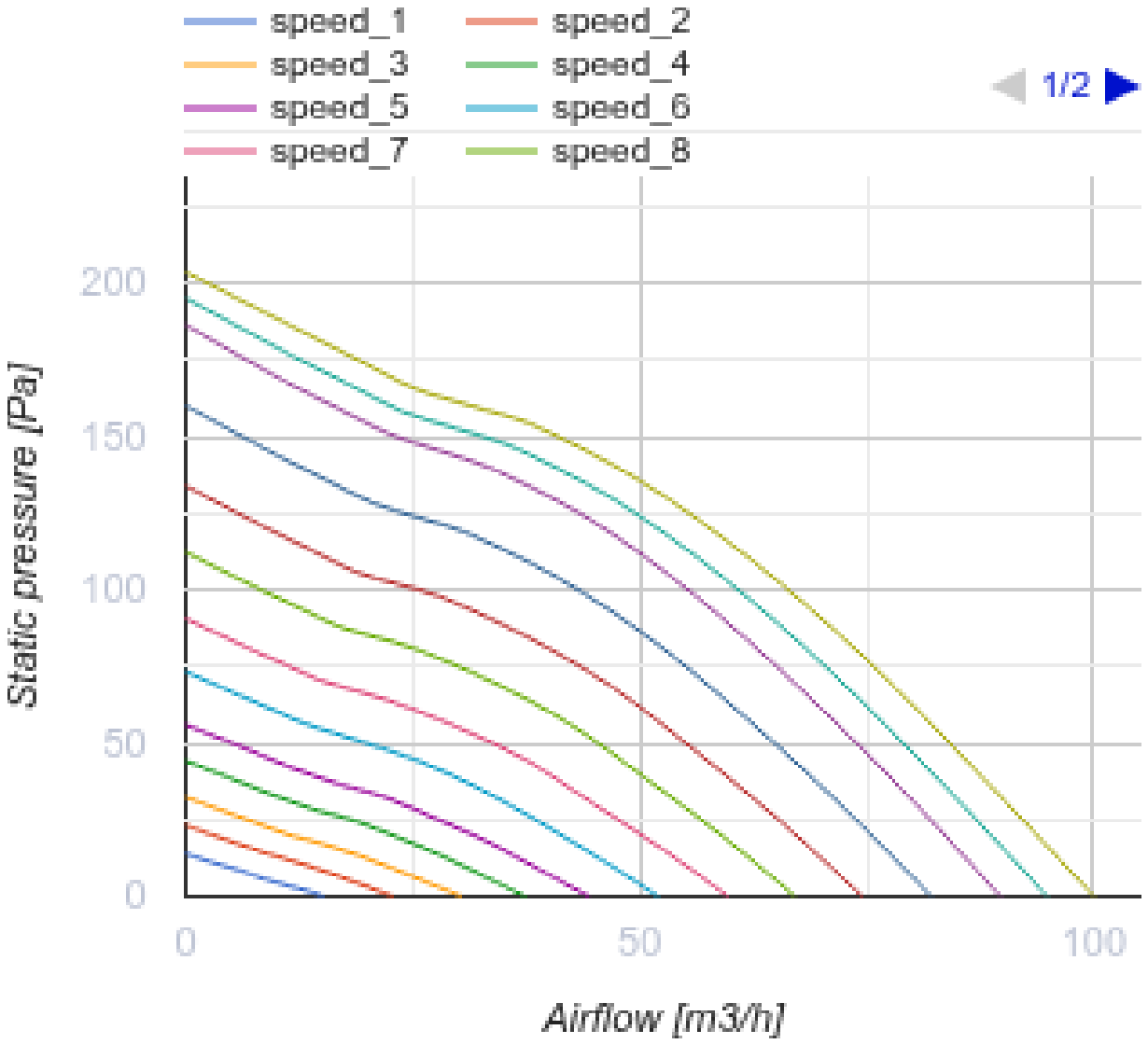
speed_1
speed_2
speed_3
speed_4
speed_5
speed_6
speed_7
speed_8
1/2
Static pressure [Pa]
200
150
100
50
0
0
50
100
Airflow [m3/h]

Dimensions

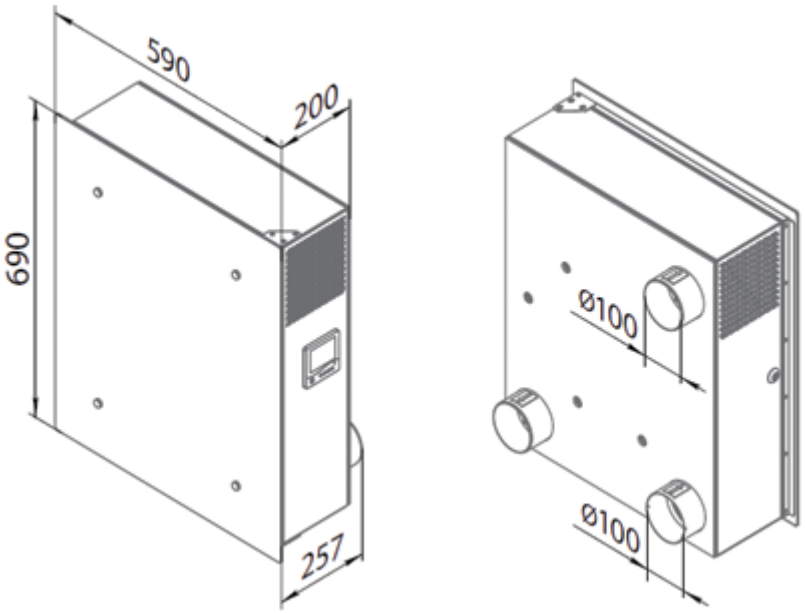

Accessories

CO2 sensors

Name	Photo	Description
CD-1		CO2 sensors
CD-2		CO2 sensors

Other accessories

Name	Photo	Description
EH Freshbox 100		Electric heater