

# Freshbox 110

Decentralized supply and exhaust unit with heat recovery

- Sound pressure level LpA at 1 m: 40
- Heat exchanger type: Counter flow
- Heat exchanger material: Polystyrene
- Sound-insulated casing
- Bypass: Auto
- Control: Remote Control, Built-in control panel, Wired control panel
- Casing material: Galvanized steel
- Humidity sensor: Built-in
- Temperature sensor: Built-in

| | Unit of measurement | Freshbox 110 | | |
|---|---|---|---|---|
| Phases | - | 1 | | |
| Minimum supply voltage | V | 230 | | |
| Maximum supply voltage | V | 230 | | |
| Power supply frequency | Hz | 50/60 | | |
| Maximum airflow | m³/h | 30 | 60 | 100 |
| Sound pressure level LpA at 1 m | dB(A) | 20 | 30 | 40 |
| Heat recovery efficiency | % | 93 | 87 | 84 |
| Heat exchanger type | - | Counter flow | | |
| Heat exchanger material | - | Polystyrene | | |
| Weight | kg | 20 | | |
| Transported air temperature (max) | °C | 40 | | |
| Transported air temperature (min) | °C | -15 | | |
| Ambient air temperature min | °C | 1 | | |
| Ambient air temperature max | °C | 40 | | |
| Ingress protection rating | - | IP20 | | |
| Ingress protection rating of the drive | - | IP44 | | |
| Ambient air humidity max | % | 60 | | |
| Minimum wall thickness | mm | 100 | | |
| Maximum wall thickness | mm | 2000 | | |

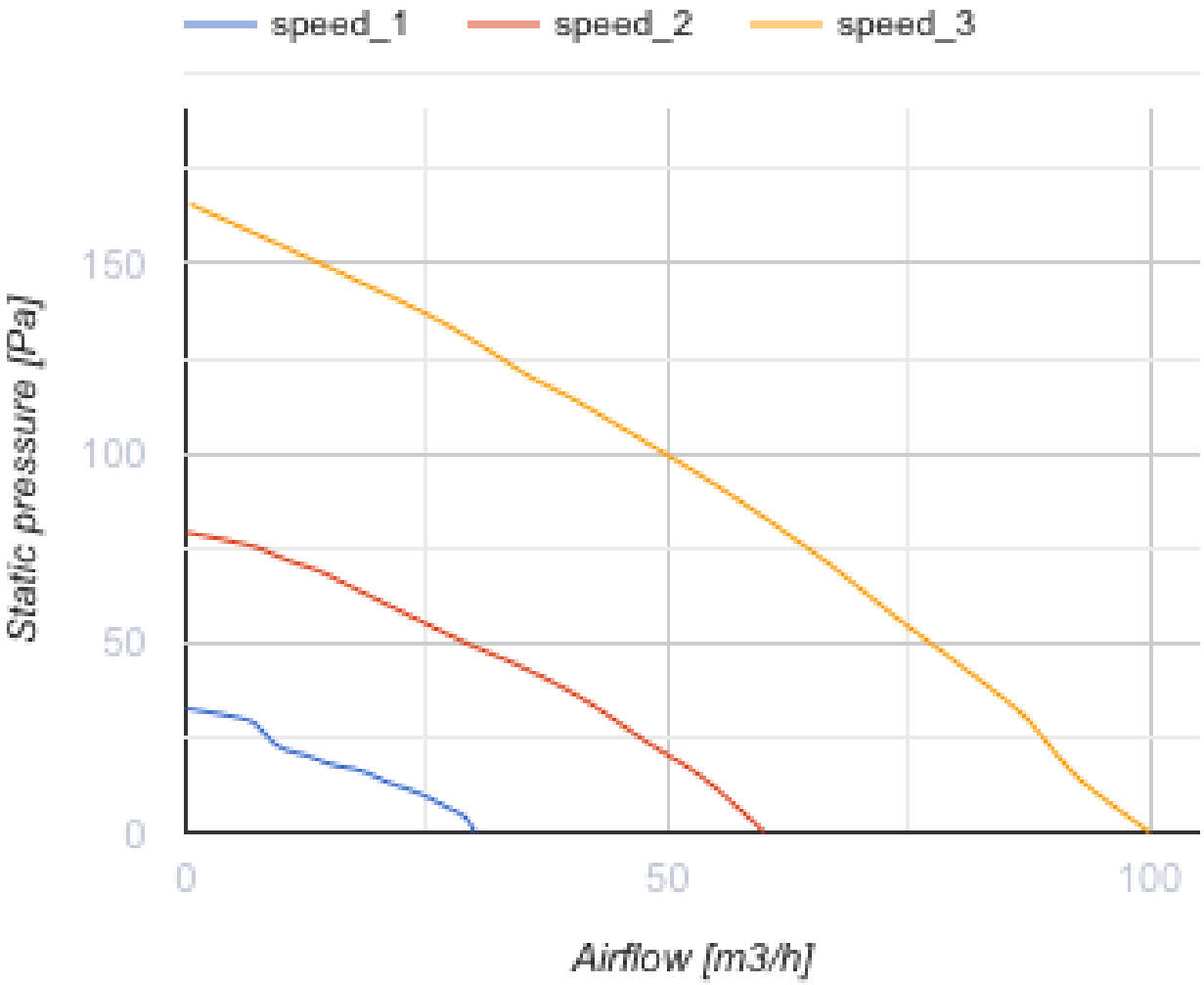
speed_1
speed_2
speed_3
Static pressure [Pa]
150
100
50
0
0
50
100
Airflow [m3/h]

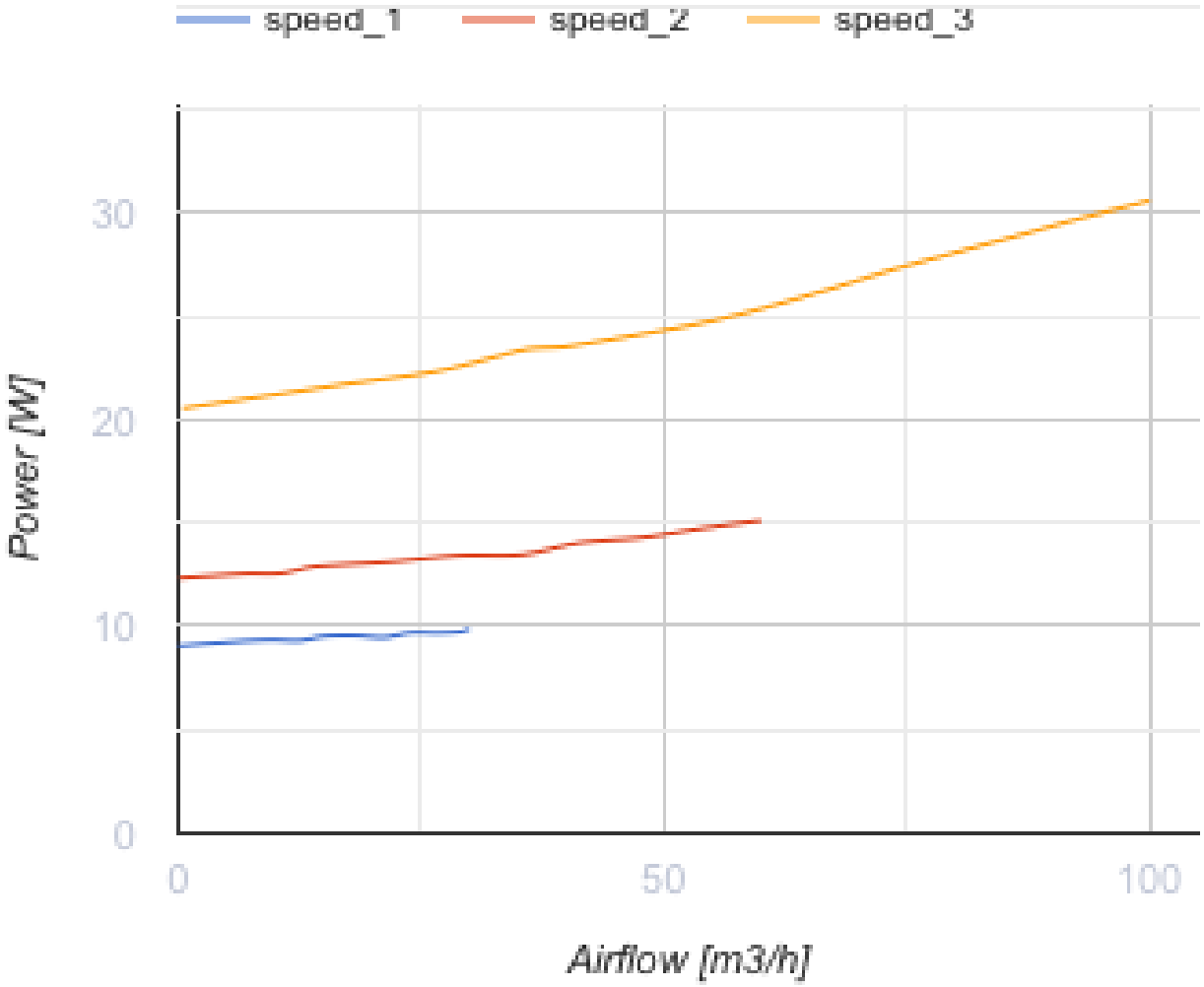


## Dimensions

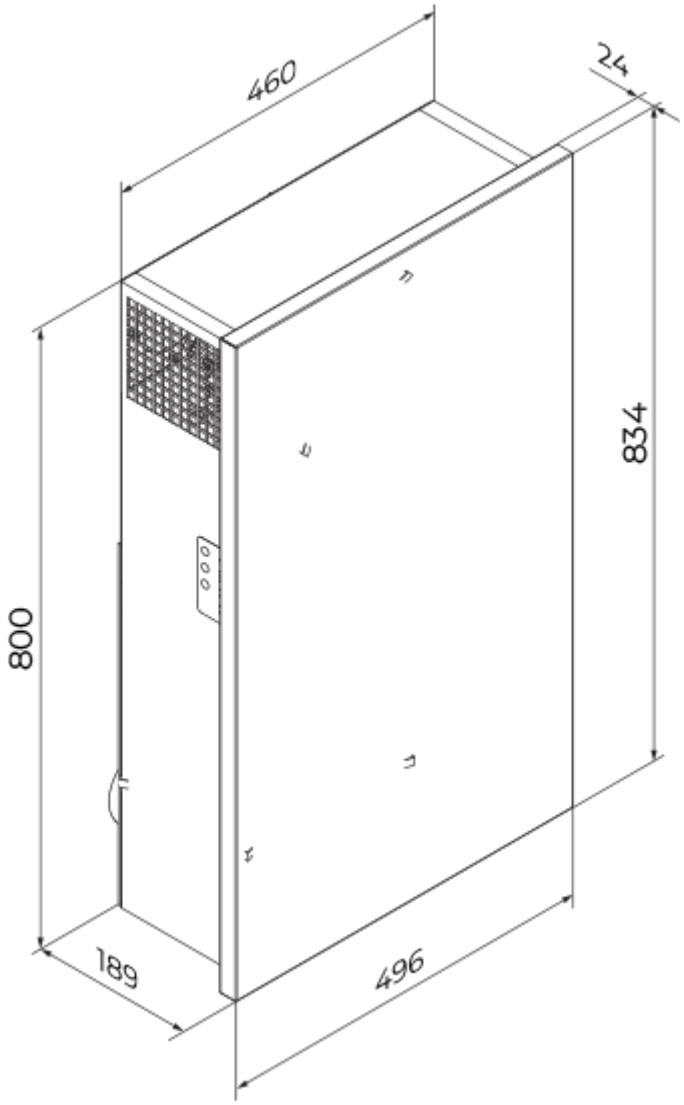
460
24
834
800
189
496

## Ecodesign

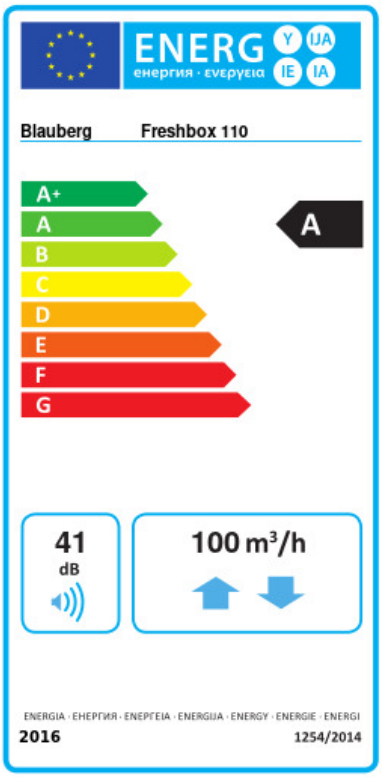


| Trademark | Blauberg | | | | | |
|---|---|---|---|---|---|---|
| Model | Freshbox 110 | | | | | |
| Specific energy consumption (SEC) (kWh/(m²/a)) | Cold | | Average | | Warm | |
| | -79.7 | A+ | -41 | A | -16.3 | E |
| Type of ventilation unit | Bidirectional | | | | | |
| Type of drive installed | 3-speed | | | | | |
| Type of heat recovery system | Recuperative | | | | | |
| Thermal efficiency of heat recovery (%) | 87 | | | | | |
| Maximum flow rate (m³/h) | 100 | | | | | |
| Electric power input (W) | 30.6 | | | | | |
| Reference flow rate (m³/s) | 0.017 | | | | | |
| Specific power input (SPI) (W/(m³/h)) | 0.252 | | | | | |
| Control typology | Local demand control | | | | | |
| Maximum internal leakage rates (%) | 1.7 | | | | | |
| Maximum external leakage rates (%) | 4.7 | | | | | |
| Airflow sensitivity at +20 Pa and -20 Pa (%) | 0 | | | | | |
| Declared typology | RVU BVU | | | | | |
| Sound power level (dB(A)) | 41 | | | | | |
| The annual electricity consumption (AEC) (kWh/a) | Cold | | Average | | Warm | |
| | 764 | | 227 | | 182 | |
| The annual heating saved (AHS) (kWh/a) | Cold | | Average | | Warm | |
| | 9007 | | 4604 | | 2082 | |

## Accessories

### CO2 sensors

| Name | Photo | Description |
|---|---|---|
| CD-1 |  | CO2 sensors |
| CD-2 |  | CO2 sensors |

| | | |
|---|---|---|
| CD-3 |  | Carbon dioxide sensor |

### Other accessories

| Name | Photo | Description |
|---|---|---|
| EH Freshbox 100 |  | Electric heater |