

Freshbox 100

Single-room air handling units

- Heat exchanger type: Counter flow
- Heat exchanger material: Polystyrene
- Sound-insulated casing
- Bypass: Auto
- Control: Remote Control, Built-in control panel, Wired control panel
- Casing material: Coated steel
- Temperature sensor: Built-in

	Unit of measurement	Freshbox 100		
Phases	-	1		
Minimum supply voltage	V	110		
Maximum supply voltage	V	240		
Power supply frequency	Hz	50/60		
Maximum airflow	m³/h	30	60	100
Heat recovery efficiency	%	98	92	89
Heat recovery efficiency, max	%	98		
Heat exchanger type	-	Counter flow		
Heat exchanger material	-	Polystyrene		
Weight	kg	31		
Transported air temperature (max)	°C	40		
Transported air temperature (min)	°C	-20		
Ambient air temperature min	°C	1		
Ambient air temperature max	°C	40		
Ingress protection rating	-	IP22		
Ingress protection rating of the drive	-	IP44		
Ambient air humidity max	%	70		
Minimum wall thickness	mm	50		
Maximum wall thickness	mm	2000		

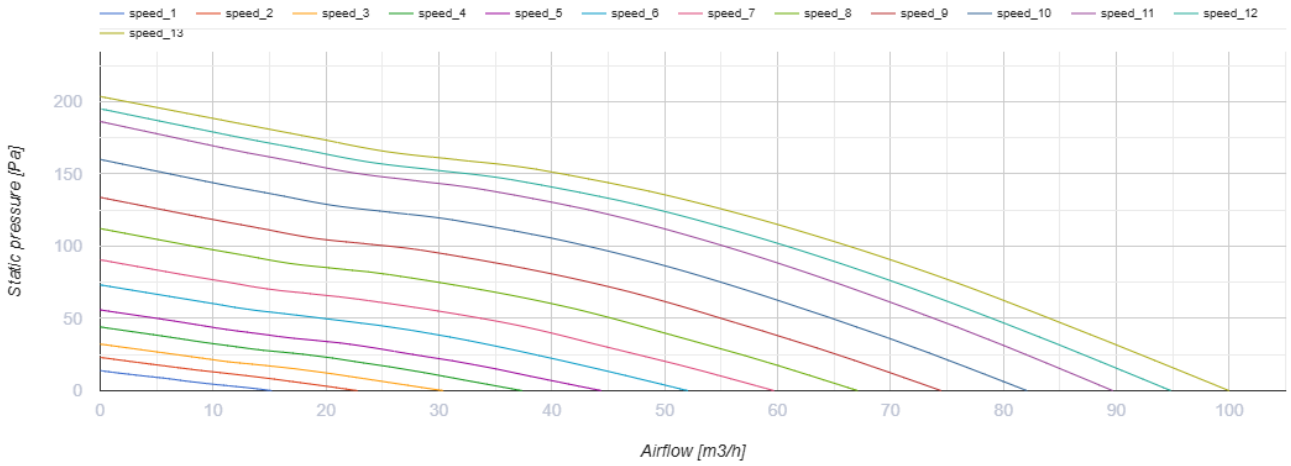
speed_1
speed_2
speed_3
speed_4
speed_5
speed_6
speed_7
speed_8
speed_9
speed_10
speed_11
speed_12
speed_13
Static pressure [Pa]
200
150
100
50
0
0
10
20
30
40
50
60
70
80
90
100
Airflow [m3/h]

Dimensions

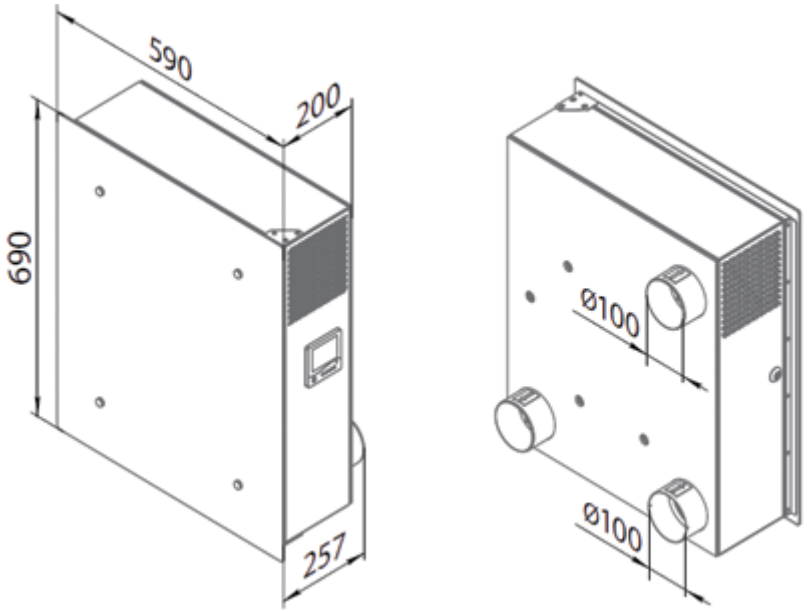
590
200
690
257
Ø100
Ø100

Ecodesign

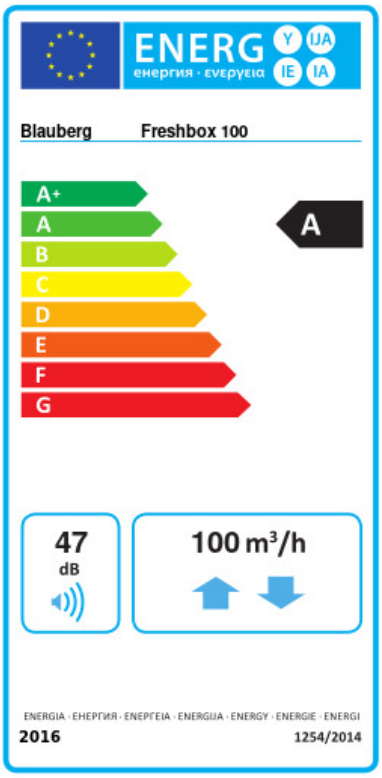

Trademark	Blauberg					
Model	Freshbox 100					
Specific energy consumption (SEC) (kWh/(m²/a))	Cold		Average		Warm	
	-81.4	A+	-41.6	A	-16.2	E
Type of ventilation unit	Bidirectional					
Type of drive installed	Variable speed					
Type of heat recovery system	Recuperative					
Thermal efficiency of heat recovery (%)	92					
Maximum flow rate (m³/h)	100					
Electric power input (W)	45					
Reference flow rate (m³/s)	0.017					
Specific power input (SPI) (W/(m³/h))	0.35					
Control typology	Local demand control					
Maximum internal leakage rates (%)	0.1					
Maximum external leakage rates (%)	0.9					
Mixing rate (%)	1					
Airflow sensitivity at +20 Pa and -20 Pa (%)	0.93					
The indoor/outdoor air tightness (m³/h)	7					
Declared typology	RVU BVU					
Sound power level (dB(A))	47					
The annual electricity consumption (AEC) (kWh/a)	Cold		Average		Warm	
	786		249		204	
The annual heating saved (AHS) (kWh/a)	Cold		Average		Warm	
	9230		4718		2133	

Accessories

CO2 sensors

Name	Photo	Description
CD-1		CO2 sensors

CD-2		CO2 sensors

Other accessories

Name	Photo	Description
EH Freshbox 100		Electric heater