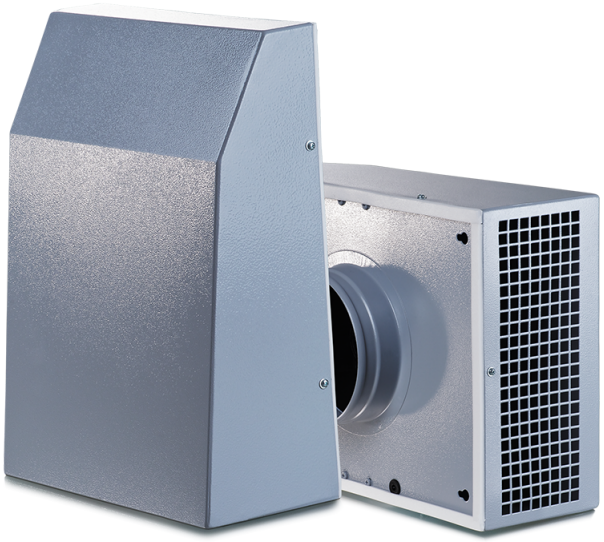

Extero 125

Extract centrifugal fans for outdoor wall installation

• Impeller type: Centrifugal impeller with backward curved blades
• Casing material: Coated steel
• Installation in any position

	Unit of measurement	Extero 125
Phases	-	1
Minimum supply voltage	V	230
Maximum supply voltage	V	230
Power supply frequency	Hz	50/60
Maximum airflow	m^3/h	485
Weight	kg	3.82
Transported air temperature (max)	°C	55
Ingress protection rating	-	IPX4
Ingress protection rating of the drive	-	IP44
Impeller material	-	Plastic

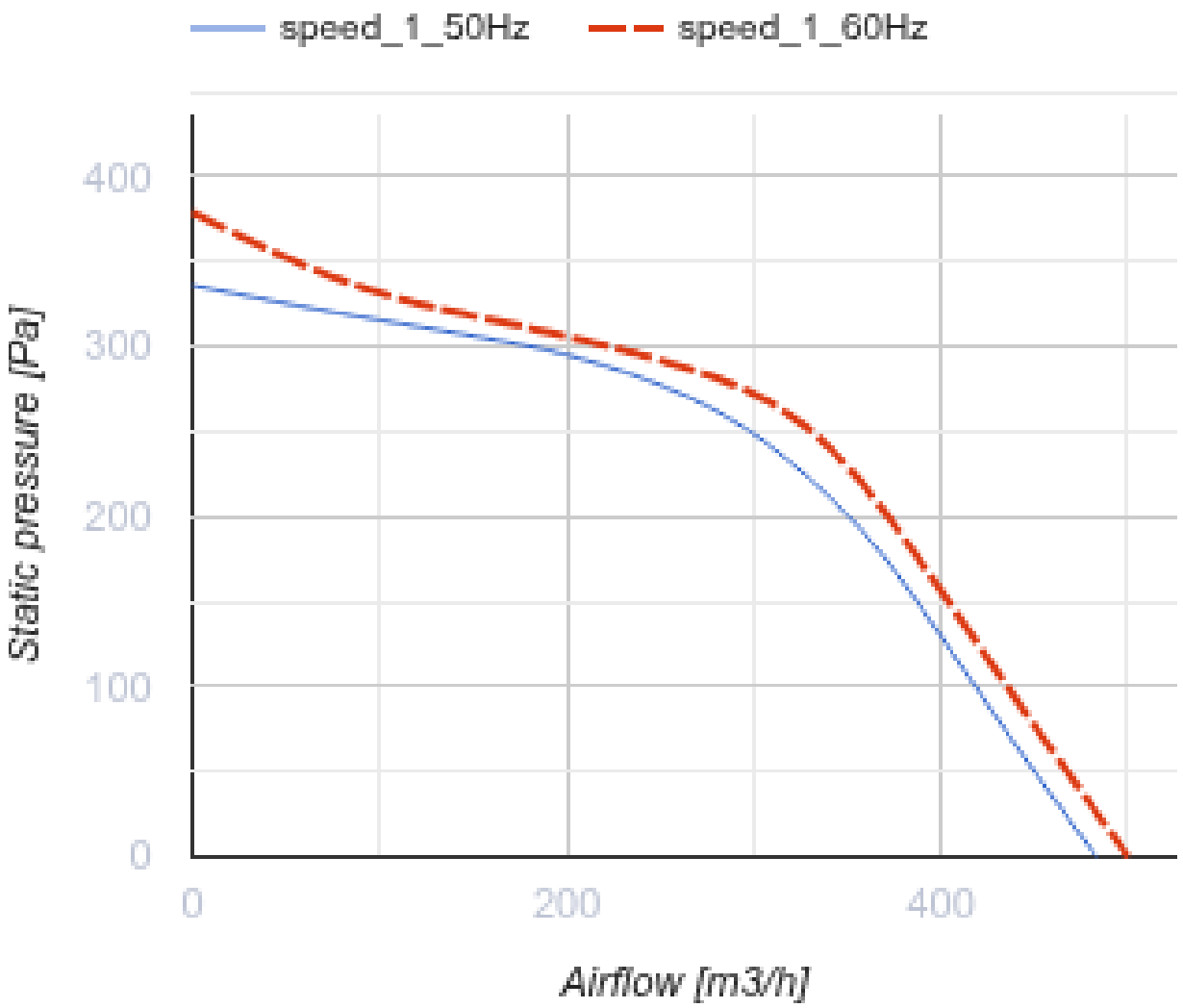
speed_1_50Hz
speed_1_60Hz
400
300
200
100
0
Static pressure [Pa]
0
200
400
Airflow [m3/h]

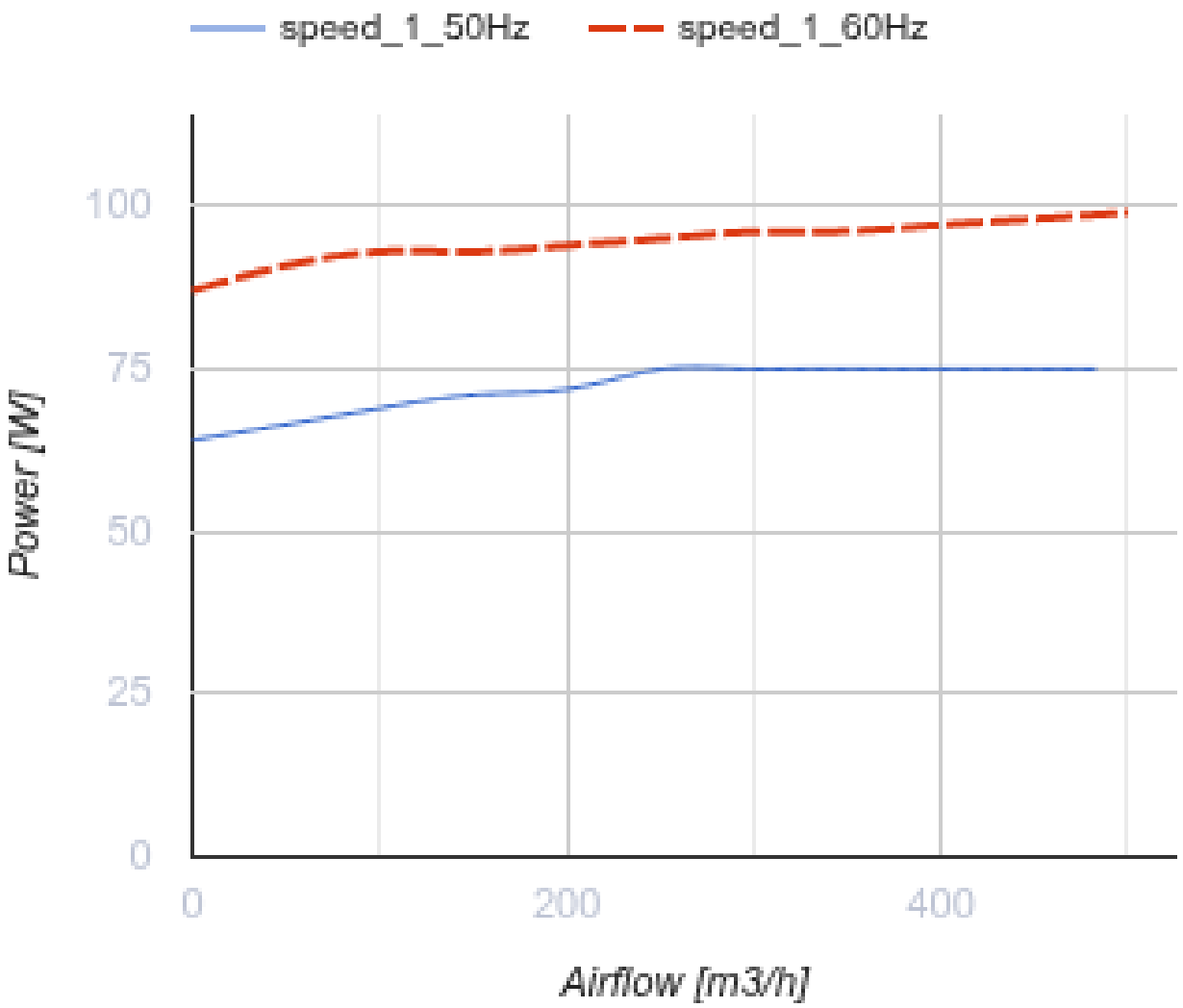

Dimensions

ØD	B	H	L
124	260	355	138

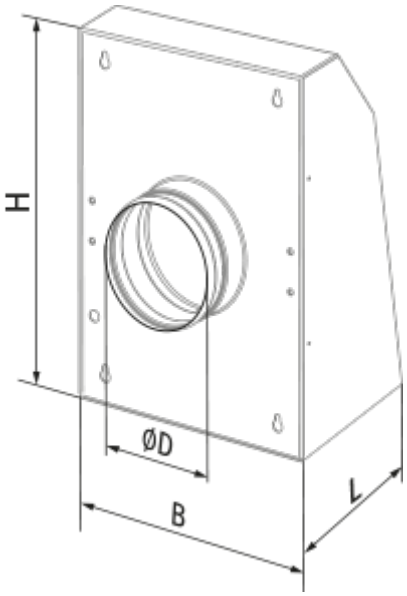
H
ØD
B
L

Ecodesign

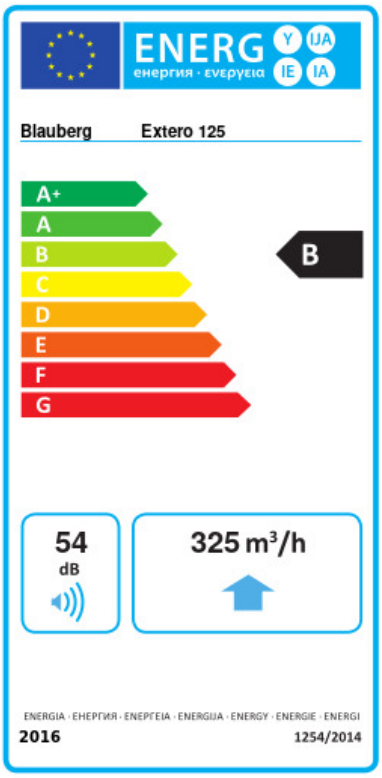

Trademark	Blauberg					
Model	Extero 125					
Specific energy consumption (SEC) (kWh/(m²/a))	Cold		Average		Warm	
	-53.4	A+	-26.4	B	-10.9	E
Type of ventilation unit	Unidirectional					
Type of drive installed	Variable speed					
Type of heat recovery system	None					
Maximum flow rate (m³/h)	325					
Electric power input (W)	60					
Reference flow rate (m³/s)	0.063					
Reference pressure difference (Pa)	50					
Specific power input (SPI) (W/(m³/h))	0.145					
Control typology	Local demand control					
Maximum external leakage rates (%)	2.7					
Declared typology	RVU UVU					
Sound power level (dB(A))	54					
The annual electricity consumption (AEC) (kWh/a)	Cold		Average		Warm	
	77		77		77	
The annual heating saved (AHS) (kWh/a)	Cold		Average		Warm	
	5536		2830		1280	

Accessories

Speed controllers

Name	Photo	Description
CDT E1.8		Thyristor speed controller