

ENH 250-3.0-1 S21

Duct heater for supply air reheating

- Casing material: Galvanized steel

	Unit of measurement	ENH 250-3.0-1 S21
Phases	-	1
Minimum supply voltage	V	230
Maximum supply voltage	V	230
Power supply frequency	Hz	50/60

Dimensions

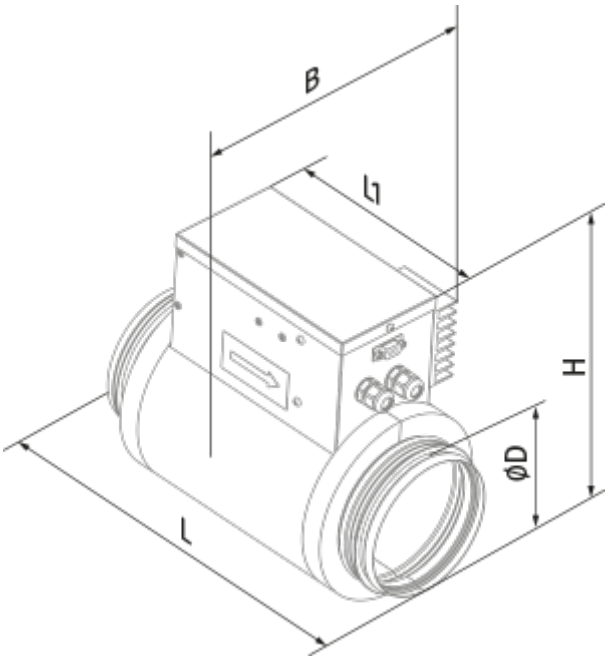
B
l1
H
ØD
L