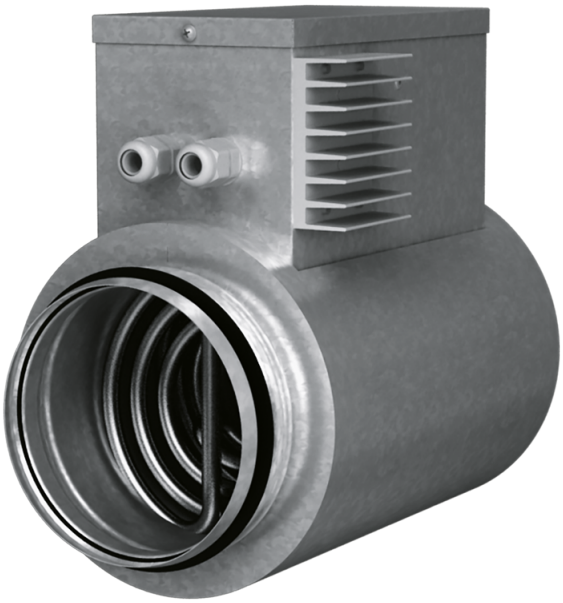

ENH 150-0.8-1 S21 V.2

Duct heater for supply air reheating

- Casing material: Galvanized steel

	Unit of measurement	ENH 150-0.8-1 S21 V.2
Phases	-	1
Minimum supply voltage	V	230
Maximum supply voltage	V	230
Power supply frequency	Hz	50/60

Dimensions

ØD	B	H	L	L1
150	189	280	306	192

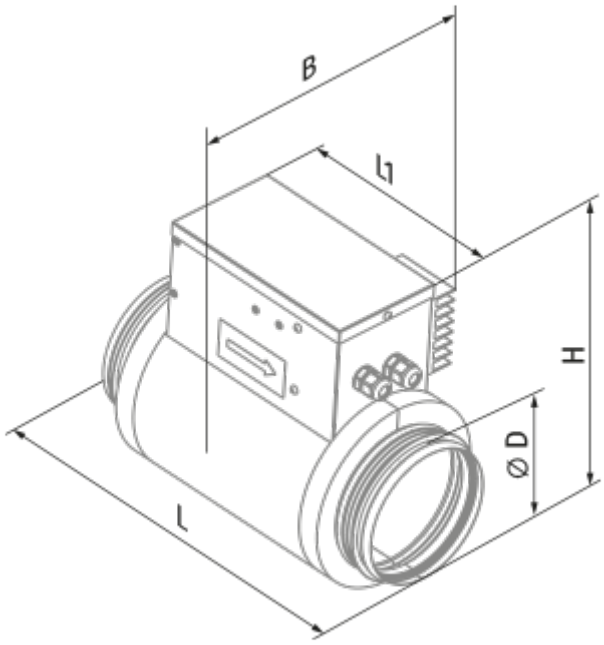
B
l1
H
ØD
L