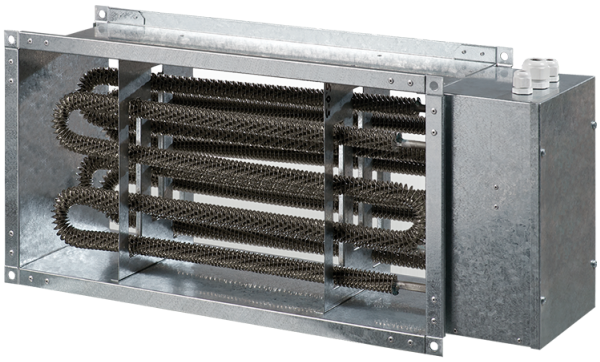

EKH 90x50-54

Duct electrical heaters for rectangular ducts

- Casing material: Galvanized steel

	Unit of measurement	EKH 90x50-54
Phases	-	3
Minimum supply voltage	V	400
Maximum supply voltage	V	400
Power supply frequency	Hz	50
Weight	kg	33.5

Dimensions

B	B1	B2	H	H1	H2	L
900	920	1040	500	520	540	750

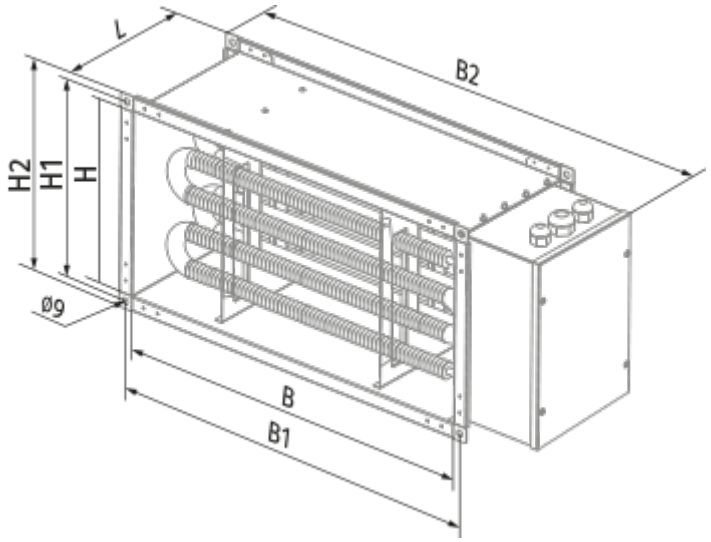
L
B2
H2
H1
H
Ø9
B
B1