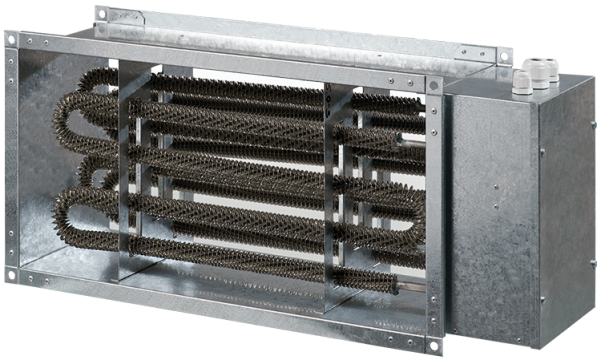

# EKH 60x35-12

Duct electrical heaters for rectangular ducts

- Casing material: Galvanized steel

| | Unit of measurement | EKH 60x35-12 |
|---|---|---|
| Phases | - | 3 |
| Minimum supply voltage | V | 400 |
| Maximum supply voltage | V | 400 |
| Power supply frequency | Hz | 50 |
| Weight | kg | 9.75 |

## Dimensions

| B | B1 | B2 | H | H1 | H2 | L |
|---|---|---|---|---|---|---|
| 600 | 620 | 740 | 350 | 370 | 390 | 200 |

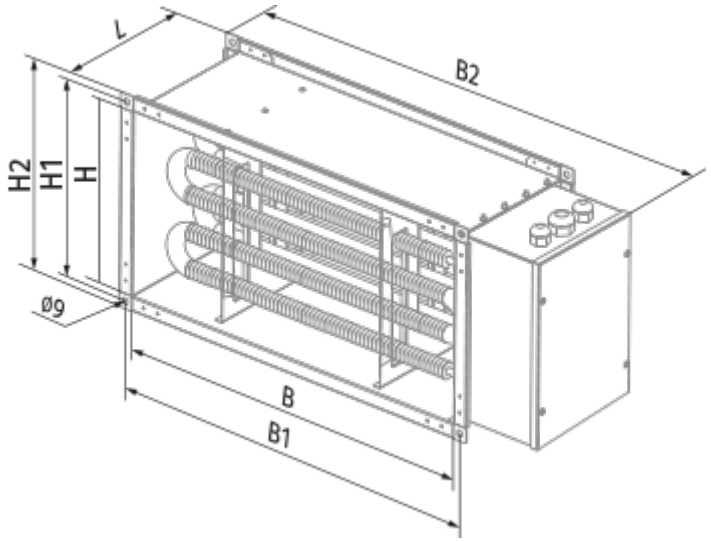
L
B2
H2
H1
H
Ø9
B
B1