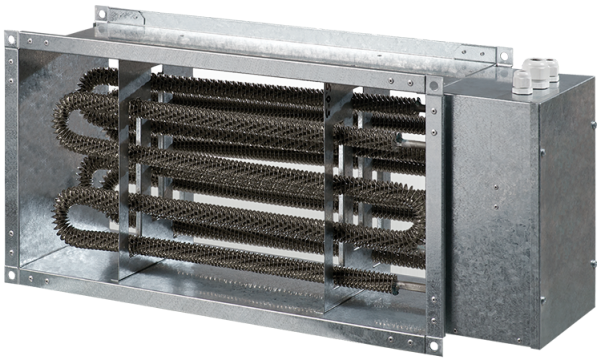

EKH 50x25-9

Duct electrical heaters for rectangular ducts

- Casing material: Galvanized steel

	Unit of measurement	EKH 50x25-9
Phases	-	3
Minimum supply voltage	V	400
Maximum supply voltage	V	400
Power supply frequency	Hz	50
Weight	kg	7.65

Dimensions

B	B1	B2	H	H1	H2	L
500	520	640	250	270	290	200

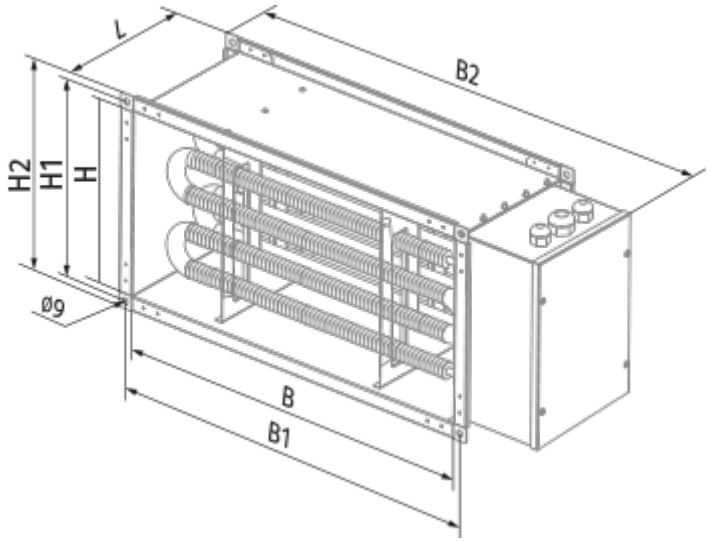
L
B2
H2
H1
H
Ø9
B
B1