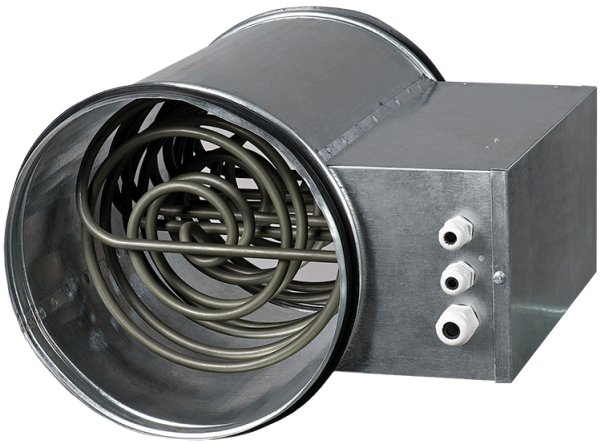

EKH 315-3.6

Duct electrical heaters for round ducts

- Casing material: Galvanized steel

	Unit of measurement	EKH 315-3.6
Phases	-	3
Minimum supply voltage	V	400
Maximum supply voltage	V	400
Power supply frequency	Hz	50
Weight	kg	5.6

Dimensions

ØD	B	H	L	L1
313	150	425	376	296

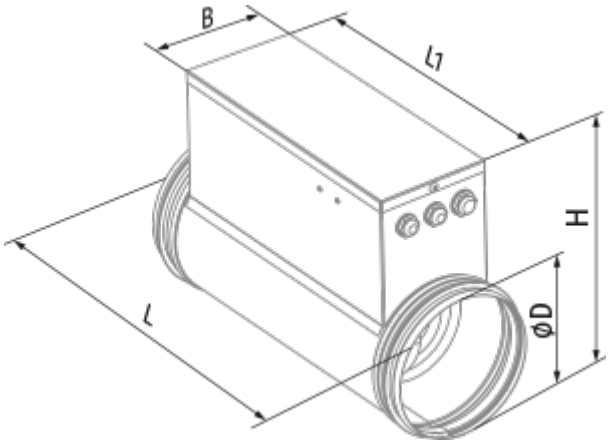
B
l1
H
ØD
L