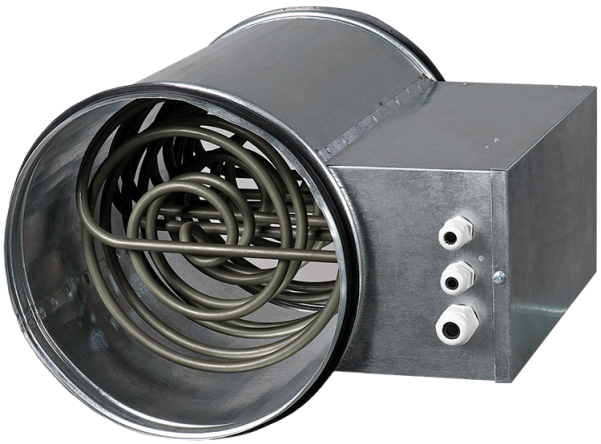

EKH 315-2.0

Duct electrical heaters for round ducts

- Casing material: Galvanized steel

	Unit of measurement	EKH 315-2.0
Phases	-	1
Minimum supply voltage	V	230
Maximum supply voltage	V	230
Power supply frequency	Hz	50
Weight	kg	4

Dimensions

ØD	B	H	L	L1
313	150	425	294	214

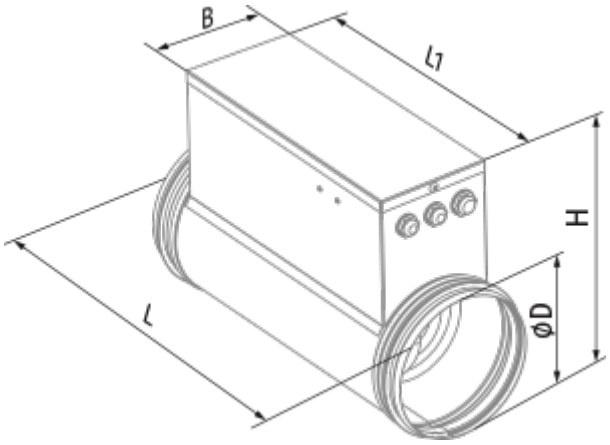
B
l1
H
ØD
L