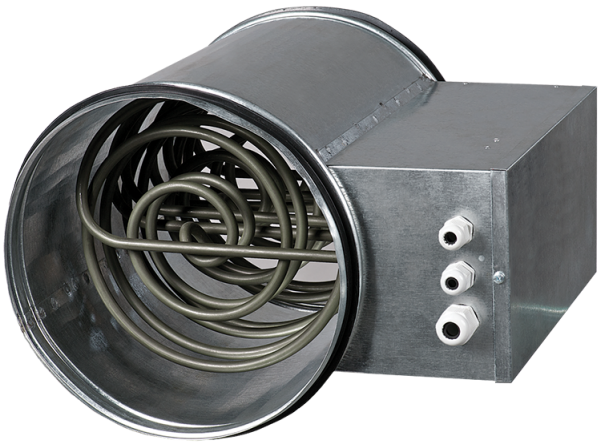

EKH 200-3.6

Duct electrical heaters for round ducts

- Casing material: Galvanized steel

	Unit of measurement	EKH 200-3.6
Phases	-	3
Minimum supply voltage	V	400
Maximum supply voltage	V	400
Power supply frequency	Hz	50
Weight	kg	3.5

Dimensions

ØD	B	H	L	L1
199	150	302	294	214

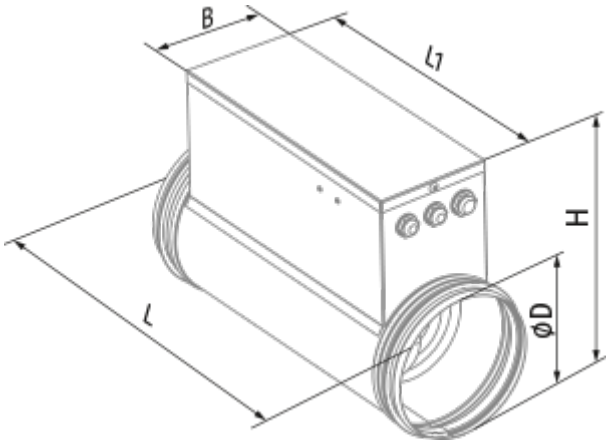
B
l1
H
ØD
L