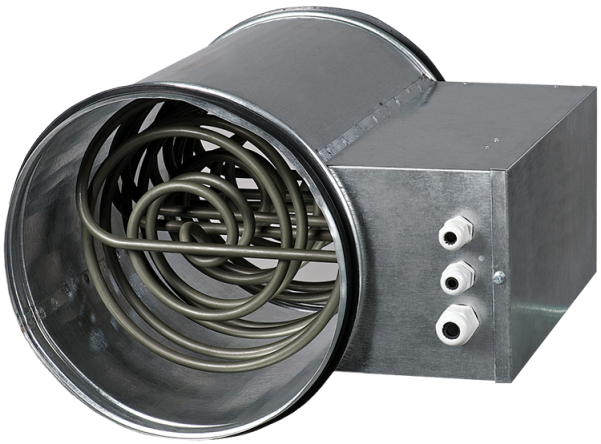

EKH 200-1.2

Duct electrical heaters for round ducts

- Casing material: Galvanized steel

	Unit of measurement	EKH 200-1.2
Phases	-	1
Minimum supply voltage	V	230
Maximum supply voltage	V	230
Power supply frequency	Hz	50
Weight	kg	2.5

Dimensions

ØD	B	H	L	L1
199	150	302	294	214

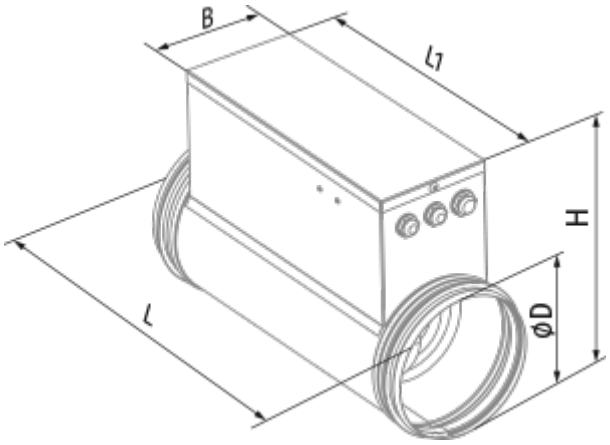
B
l1
H
ØD
L