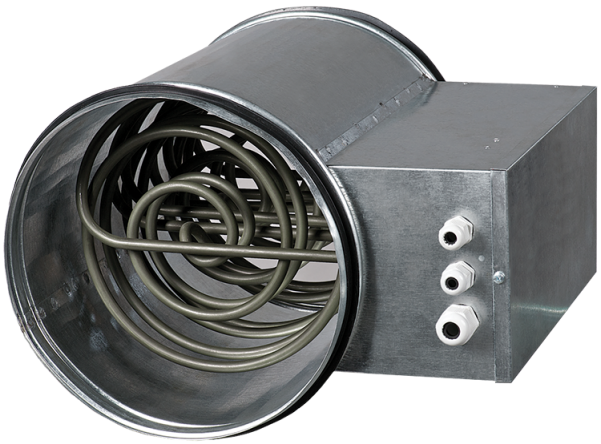

EKH 160-2.4

Duct electrical heaters for round ducts

- Casing material: Galvanized steel

	Unit of measurement	EKH 160-2.4
Phases	-	1
Minimum supply voltage	V	230
Maximum supply voltage	V	230
Power supply frequency	Hz	50
Weight	kg	2.5

Dimensions

ØD	B	H	L	L1
159	120	267	306	226

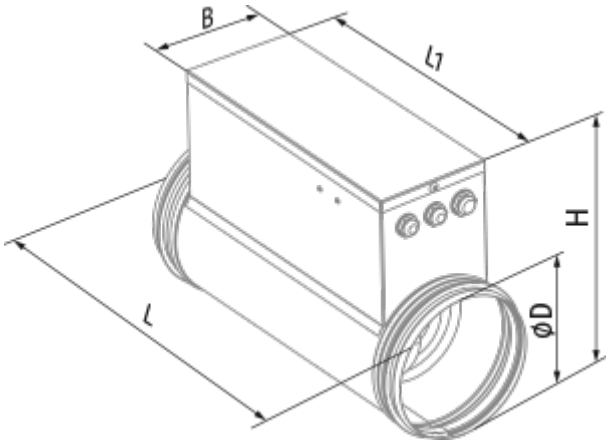
B
l1
H
ØD
L