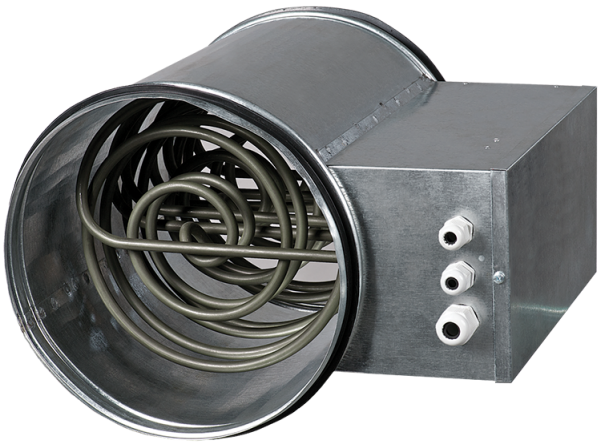

EKH 125-2.4

Duct electrical heaters for round ducts

- Casing material: Galvanized steel

	Unit of measurement	EKH 125-2.4
Phases	-	1
Minimum supply voltage	V	230
Maximum supply voltage	V	230
Power supply frequency	Hz	50
Weight	kg	1.9

Dimensions

ØD	B	H	L	L1
124	103	230	376	296

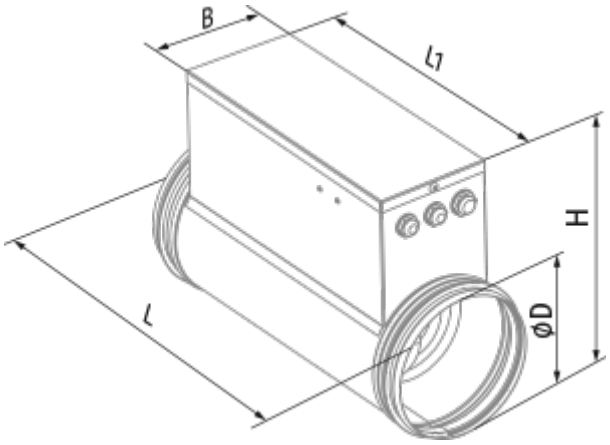
B
l1
H
ØD
L