

DWP2 250

Swirl diffusers

- Casing material: Steel

	Unit of measurement	DWP2 250
Weight	kg	0.567

Dimensions

d	H
250	150

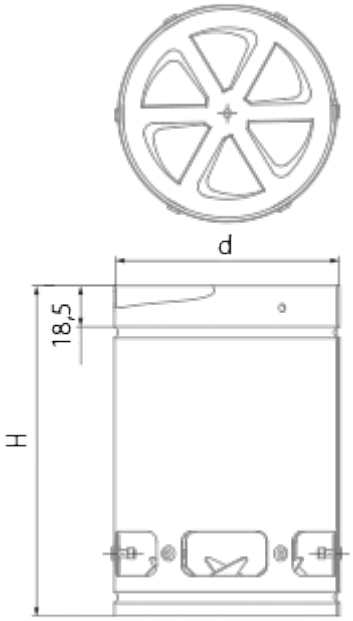
d
18,5
H