

DWP2 160

Swirl diffusers

- Casing material: Steel

	Unit of measurement	DWP2 160
Weight	kg	0.341

Dimensions

d	H
160	150

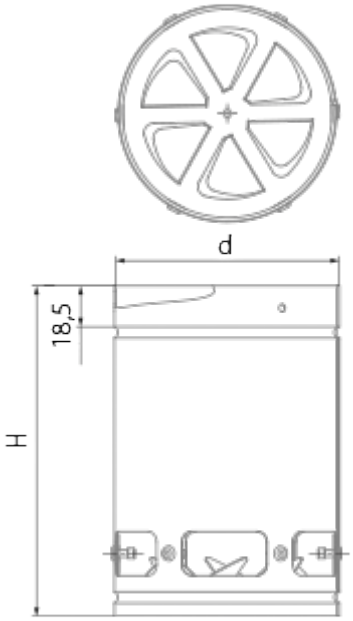
d
18,5
H