

Ducto-U Plus 125

Low noise axial inline fans for exhaust or supply ventilation with superior air flow

• Casing material: Plastic

	Unit of measurement	Ducto-U Plus 125	
Speed	-	1	2
Minimum supply voltage	V	220	
Maximum supply voltage	V	240	
Power supply frequency	Hz	50	
Maximum airflow	m³/h	145	197
Weight	kg	0.75	
Ambient air temperature min	°C	1	
Ambient air temperature max	°C	40	
Ingress protection rating	-	IPX4	
Impeller material	-	Plastic	

Dimensions

L	ØD	K
161.5	125	53.5

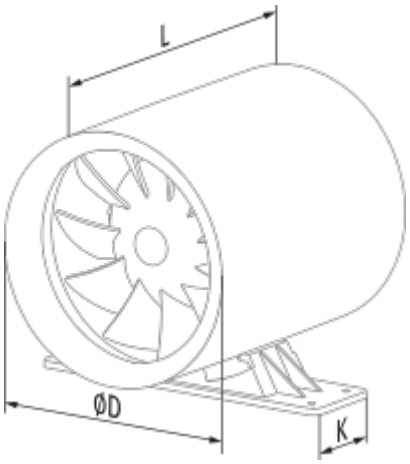

Accessories

Speed controllers

Name	Photo	Description
CDT E1.8		Thyristor speed controller