

Ducto-U 125 T

Low noise axial inline fans for exhaust or supply ventilation with superior air flow

- Casing material: Plastic
- Timer: Turn off timer

	Unit of measurement	Ducto-U 125 T
Maximum supply voltage	V	240
Minimum supply voltage	V	220
Power supply frequency	Hz	50
Maximum airflow	m^3/h	197
Weight	kg	0.75
Ambient air temperature max	°C	40
Ambient air temperature min	°C	1
Ingress protection rating	-	IPX4
Impeller material	-	Plastic

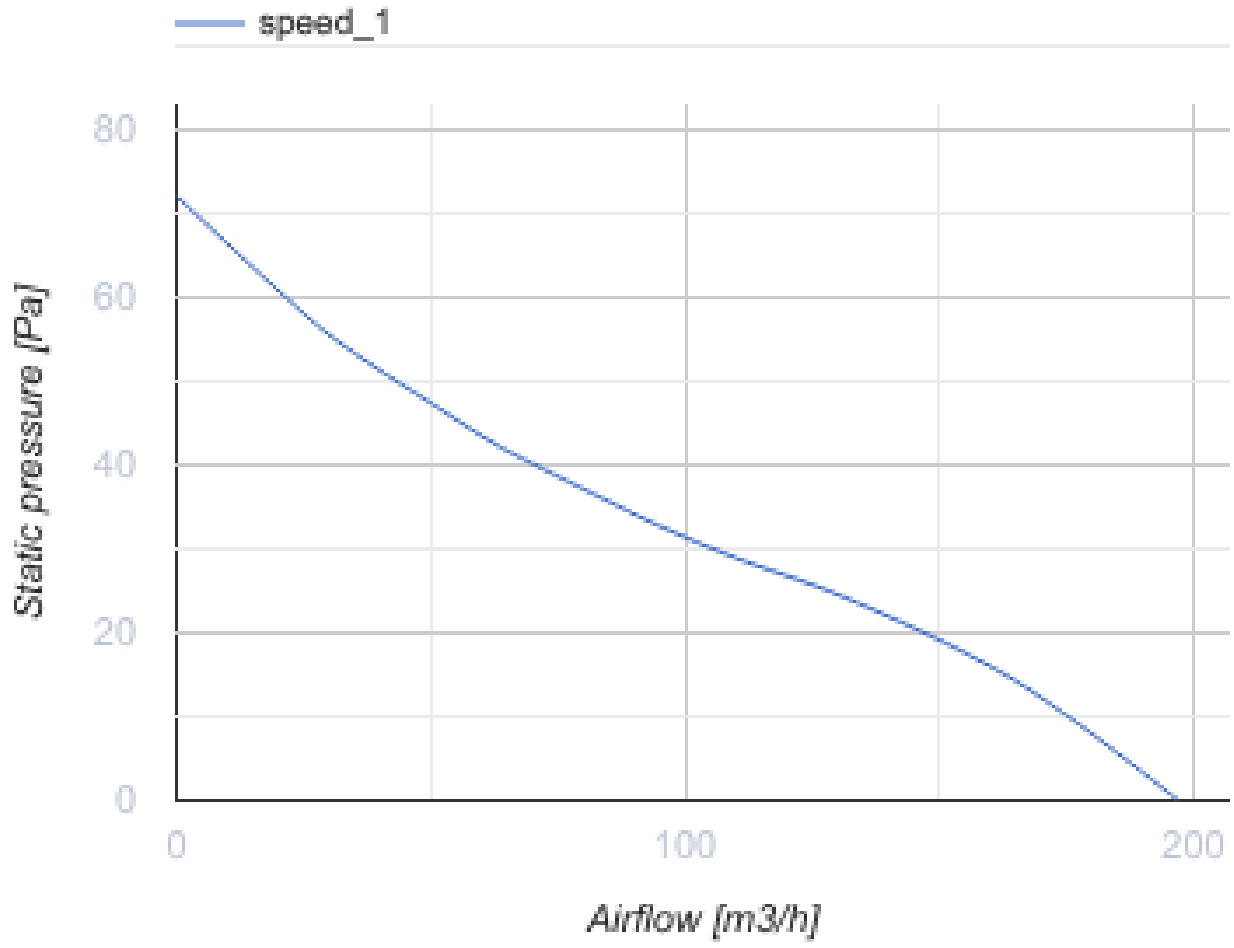

Dimensions

L	ØD	K
161.5	125	53.5

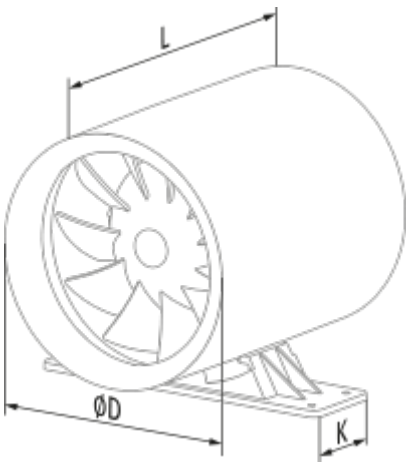

Accessories

Speed controllers

Name	Photo	Description
CDT E1.8		Thyristor speed controller