

Ducto-U 100

Low noise axial inline fans for exhaust or supply ventilation with superior air flow

• Casing material: Plastic

	Unit of measurement	Ducto-U 100
Minimum supply voltage	V	220
Maximum supply voltage	V	240
Power supply frequency	Hz	50
Maximum airflow	m^3/h	100
Weight	kg	0.61
Ambient air temperature min	°C	1
Ambient air temperature max	°C	40
Ingress protection rating	-	IPX4
Impeller material	-	Plastic

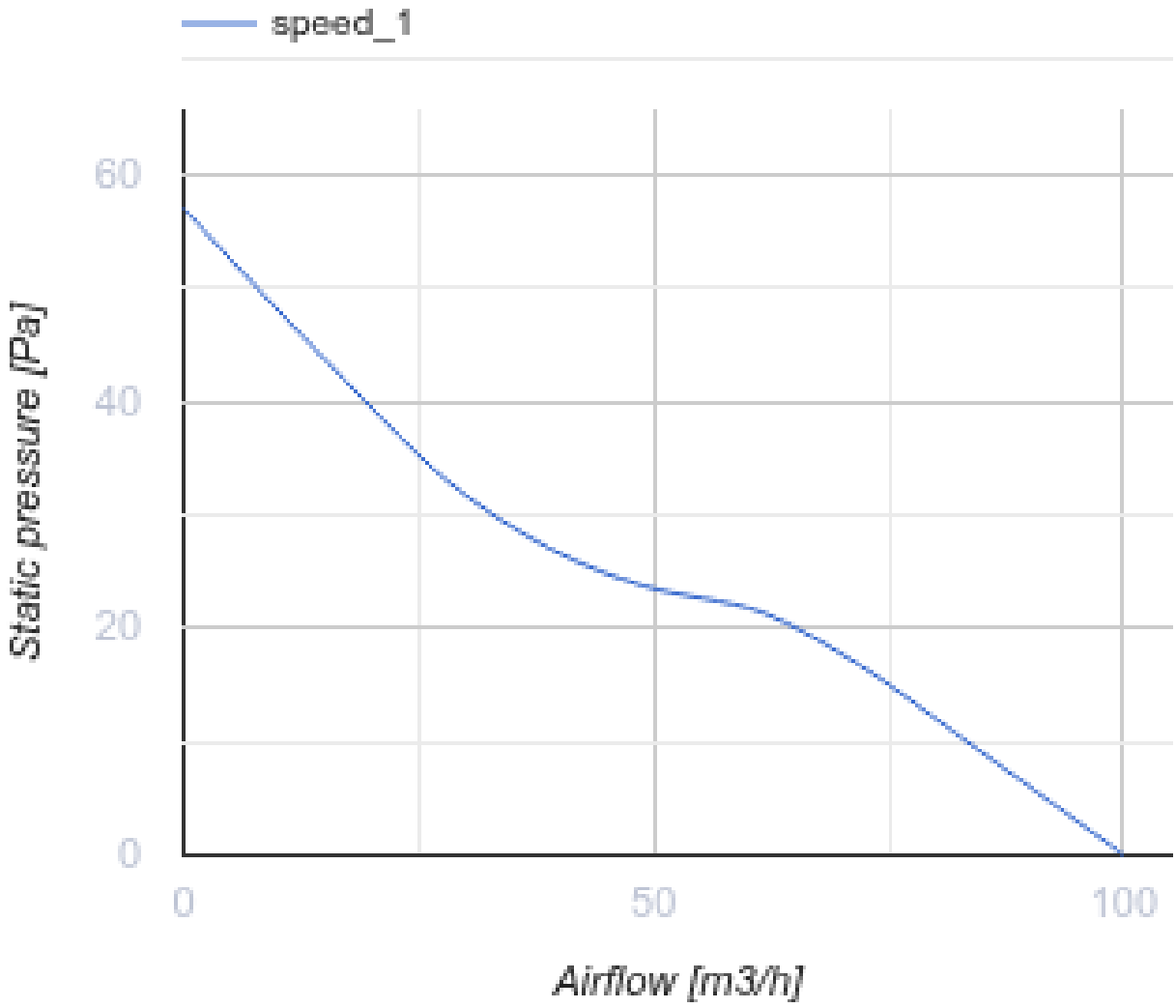

Dimensions

L	ØD	K
137.5	100	53.5

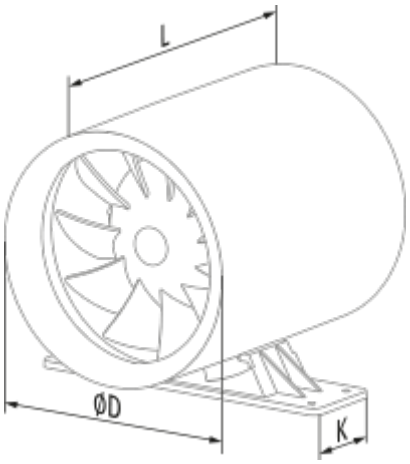

Accessories

Speed controllers

Name	Photo	Description
CDT E1.8		Thyristor speed controller