

Ducto Plus 150 T

Low noise axial inline fans for exhaust or supply ventilation with superior air flow

- Casing material: Plastic
- Timer: Turn off timer

	Unit of measurement	Ducto Plus 150 T	
Speed	-	1	2
Minimum supply voltage	V	220	
Maximum supply voltage	V	240	
Power supply frequency	Hz	50	
Maximum airflow	m³/h	250	335
Weight	kg	1.3	
Ambient air temperature min	°C	1	
Ambient air temperature max	°C	40	
Ingress protection rating	-	IPX4	
Impeller material	-	Plastic	

Dimensions

L	ØD
181.5	150

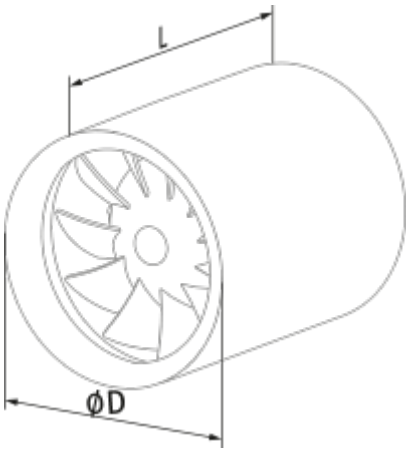
L
ØD

Ecodesign

Trademark	Blauberg					
Model	Ducto Plus 150 T					
Specific energy consumption (SEC) (kWh/(m²/a))	Cold		Average		Warm	
	-31.2	B	-14.8	E	-5.4	F
Type of ventilation unit	Unidirectional					
Type of drive installed	2-speed					
Type of heat recovery system	None					
Maximum flow rate (m³/h)	340					
Electric power input (W)	22					
Reference flow rate (m³/s)	0.069					
Specific power input (SPI) (W/(m³/h))	0.076					
Control typology	Manual control					
Maximum external leakage rates (%)	2.7					
Declared typology	RVU UVU					
Sound power level (dB(A))	56					
The annual electricity consumption (AEC) (kWh/a)	Cold		Average		Warm	
	95		95		95	
The annual heating saved (AHS) (kWh/a)	Cold		Average		Warm	
	3355		1715		776	

Accessories

Speed controllers

Name	Photo	Description
CDT E1.8		Thyristor speed controller