

# Ducto Plus 100

Low noise axial inline fans for exhaust or supply ventilation with superior air flow

• Casing material: Plastic

| | Unit of measurement | Ducto Plus 100 | |
|---|---|---|---|
| Speed | - | 1 | 2 |
| Maximum supply voltage | V | 240 | |
| Minimum supply voltage | V | 220 | |
| Power supply frequency | Hz | 50 | |
| Maximum airflow | m³/h | 75 | 100 |
| Weight | kg | 0.61 | |
| Ambient air temperature max | °C | 40 | |
| Ambient air temperature min | °C | 1 | |
| Ingress protection rating | - | IPX4 | |
| Impeller material | - | Plastic | |

## Dimensions

| L | ØD |
|---|---|
| 137.5 | 100 |

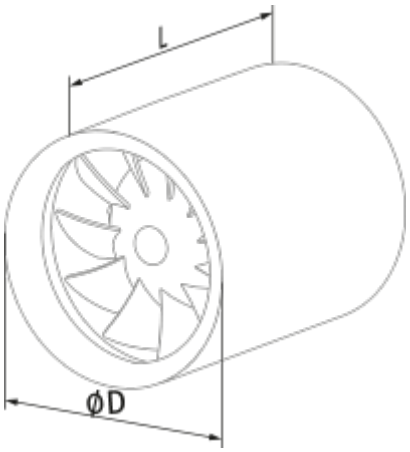
L
ØD

## Ecodesign

| | | | | | | |
|---|---|---|---|---|---|---|
| Trademark | Blauberg | | | | | |
| Model | Ducto Plus 100 | | | | | |
| Specific energy consumption (SEC) (kWh/(m²/a)) | Cold | | Average | | Warm | |
| | -31.7 | B | -15.3 | E | -5.9 | F |
| Type of ventilation unit | Unidirectional | | | | | |
| Type of drive installed | 2-speed | | | | | |
| Type of heat recovery system | None | | | | | |
| Maximum flow rate (m³/h) | 110 | | | | | |
| Electric power input (W) | 7.5 | | | | | |
| Reference flow rate (m³/s) | 0.021 | | | | | |
| Specific power input (SPI) (W/(m³/h)) | 0.06 | | | | | |
| Control typology | Manual control | | | | | |
| Maximum external leakage rates (%) | 2.7 | | | | | |
| Sound power level (dB(A)) | 42 | | | | | |
| Declared typology | RVU UVU | | | | | |
| The annual electricity consumption (AEC) (kWh/a) | Cold | | Average | | Warm | |
| | 75 | | 75 | | 75 | |
| The annual heating saved (AHS) (kWh/a) | Cold | | Average | | Warm | |
| | 3355 | | 1715 | | 776 | |

## Accessories

### Speed controllers

| Name | Photo | Description |
|---|---|---|
| CDT E1.8 |  | Thyristor speed controller |