

Ducto 150

Low noise axial inline fans for exhaust or supply ventilation with superior air flow

• Casing material: Plastic

	Unit of measurement	Ducto 150
Minimum supply voltage	V	220
Maximum supply voltage	V	240
Power supply frequency	Hz	50
Maximum airflow	m^3/h	335
Weight	kg	1.3
Ambient air temperature min	°C	1
Ambient air temperature max	°C	40
Ingress protection rating	-	IPX4
Impeller material	-	Plastic

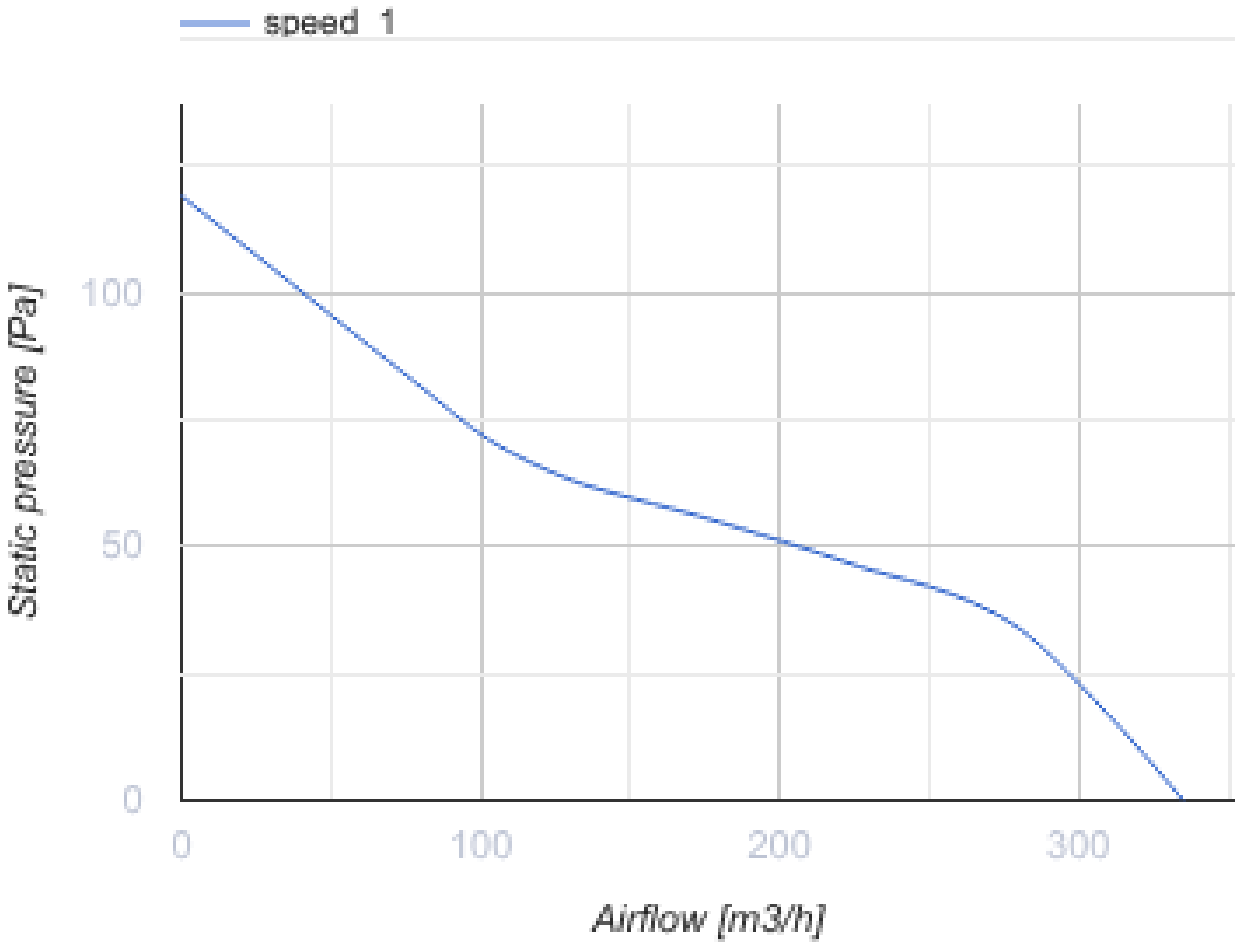

Dimensions

L	ØD
181.5	150

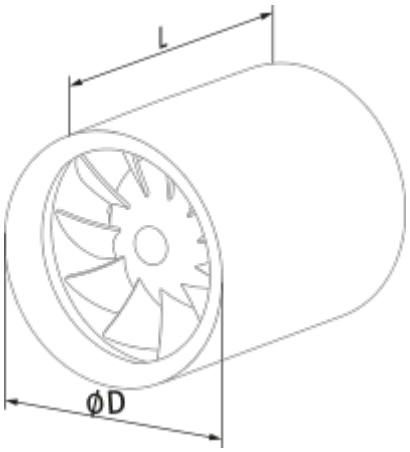

Ecodesign

Trademark	Blauberg					
Model	Ducto 150					
Specific energy consumption (SEC) (kWh/(m²/a))	Cold		Average		Warm	
	-31.5	B	-15.1	E	-5.7	F
Type of ventilation unit	Unidirectional					
Type of drive installed	Single speed					
Type of heat recovery system	None					
Maximum flow rate (m³/h)	340					
Electric power input (W)	22					
Reference flow rate (m³/s)	0.066					
Specific power input (SPI) (W/(m³/h))	0.065					
Control typology	Manual control					
Maximum external leakage rates (%)	2.7					
Declared typology	RVU UVU					
Sound power level (dB(A))	59					
The annual electricity consumption (AEC) (kWh/a)	Cold		Average		Warm	
	81		81		81	
The annual heating saved (AHS) (kWh/a)	Cold		Average		Warm	
	3355		1715		776	

Accessories

Speed controllers

Name	Photo	Description
CDT E1.8		Thyristor speed controller