

DPL3 100

Plastic diffusers for supply and exhaust ventilation and air conditioning systems

• Casing material: Plastic

	Unit of measurement	DPL3 100
Ingress protection rating	-	IPX4

Dimensions

D	D1	L	L1
173	97	60	17.6

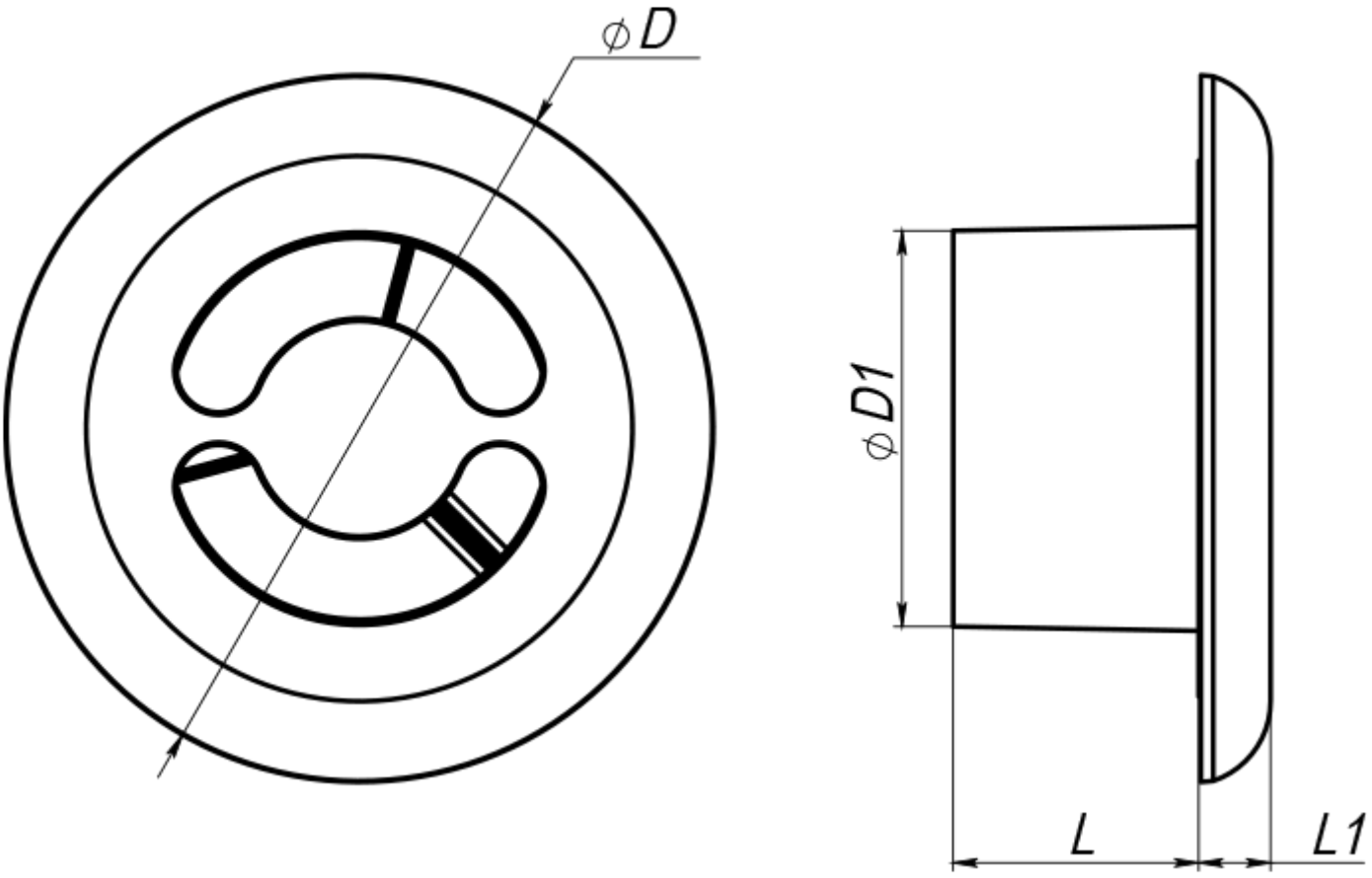
ϕD
ϕD1
L
L1