

DPK 100

The diffuser is compatible with all types of design decorative panels, including glass panels

• Casing material: Plastic

	Unit of measurement	DPK 100

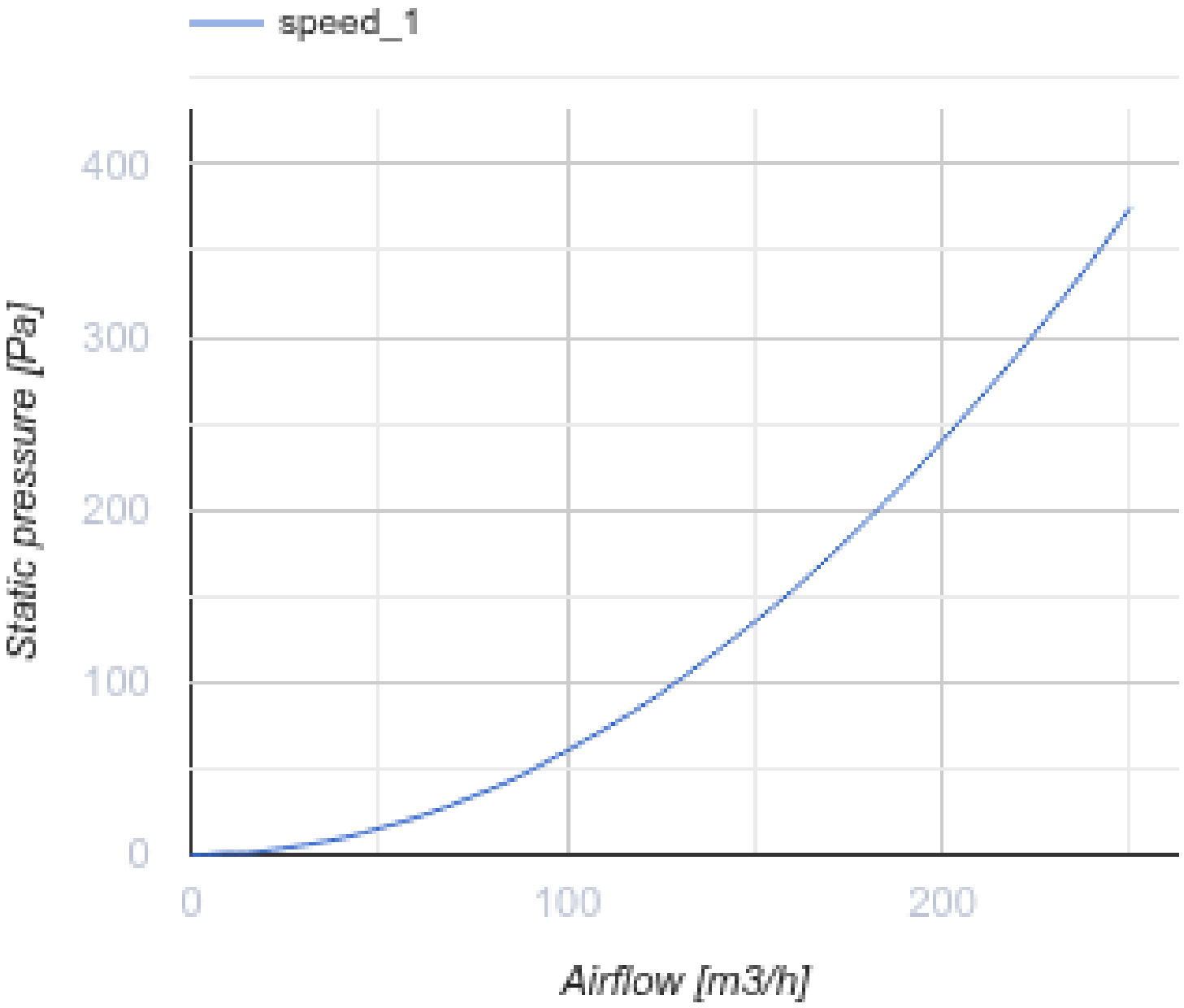
speed_1
400
300
200
100
0
Static pressure [Pa]
0
100
200
Airflow [m3/h]

Dimensions

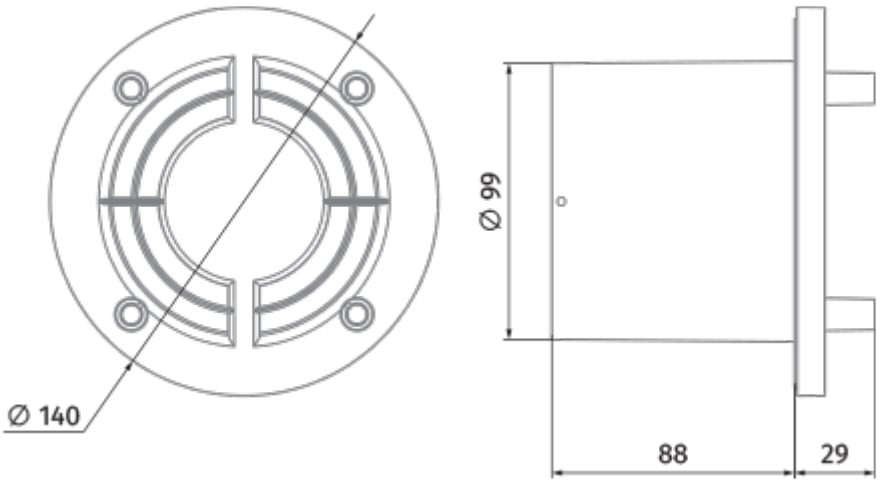

Accessories

Decorative panels

Name	Photo	Description
DP 180 Plan		Design Konzept System panels are the finishing touch of your home's ventilation design
DP 180 Plan Red		Design Konzept System panels are the finishing touch of your home's ventilation design
DP 180 Plan Cosmos Black		Design Konzept System panels are the finishing touch of your home's ventilation design
DP 180 Platinum		Design Konzept System panels are the finishing touch of your home's ventilation design
DP 180 Shield		Design Konzept System panels are the finishing touch of your home's ventilation design
DP 180 Bavaria		Design Konzept System panels are the finishing touch of your home's ventilation design
DP 180 Hi-Fi		Design Konzept System panels are the finishing touch of your home's ventilation design
DP 180 Moon		Design Konzept System panels are the finishing touch of your home's ventilation design
DP 180 Chrome		Design Konzept System panels are the finishing touch of your home's ventilation design

DP 180 Hi-Tech		Design Konzept System panels are the finishing touch of your home's ventilation design
DPA 100/180 Glas		Design Konzept System panels are the finishing touch of your home's ventilation design
DPA 100/180 Glas Red		Design Konzept System panels are the finishing touch of your home's ventilation design
DPA 100/180 Glas Black		Design Konzept System panels are the finishing touch of your home's ventilation design