

DPCH 125

DPCH flush-mounted diffuser series

- Casing material: Polyurethane foam

	Unit of measurement	DPCH 125

Dimensions

Ø D	Ø D1	Ø D2	L	H	H1	B
125	250	234	323	108	59	80

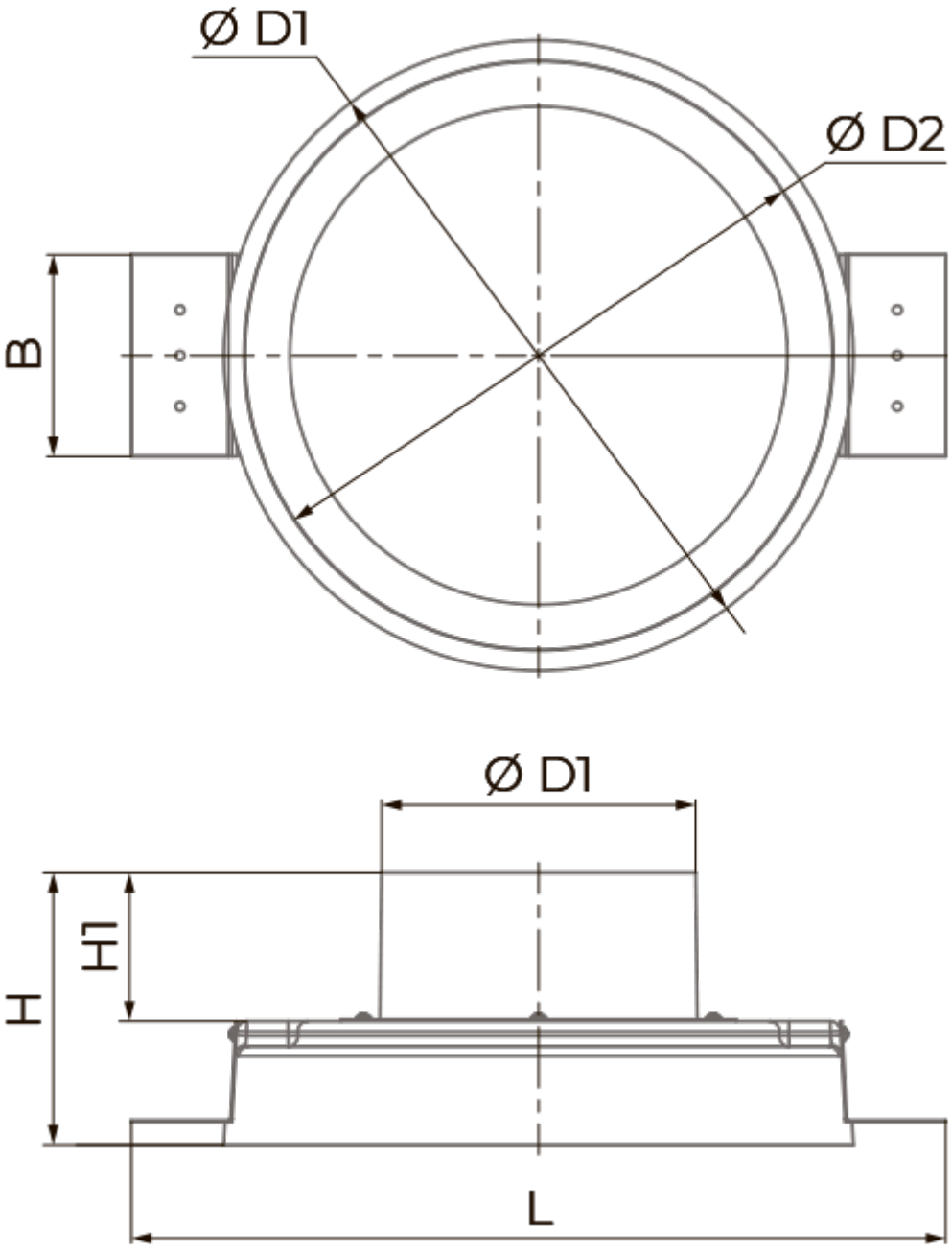
Ø D1
Ø D2
B
Ø D1
H1
H
L