

DPCH 125 MFC

DPCH flush-mounted diffuser series

- Casing material: Polyurethane foam

	Unit of measurement	DPCH 125 MFC

Dimensions

Ø D	Ø D1	Ø D2	L	H	H1	B
124	250	234	323	99	50	80

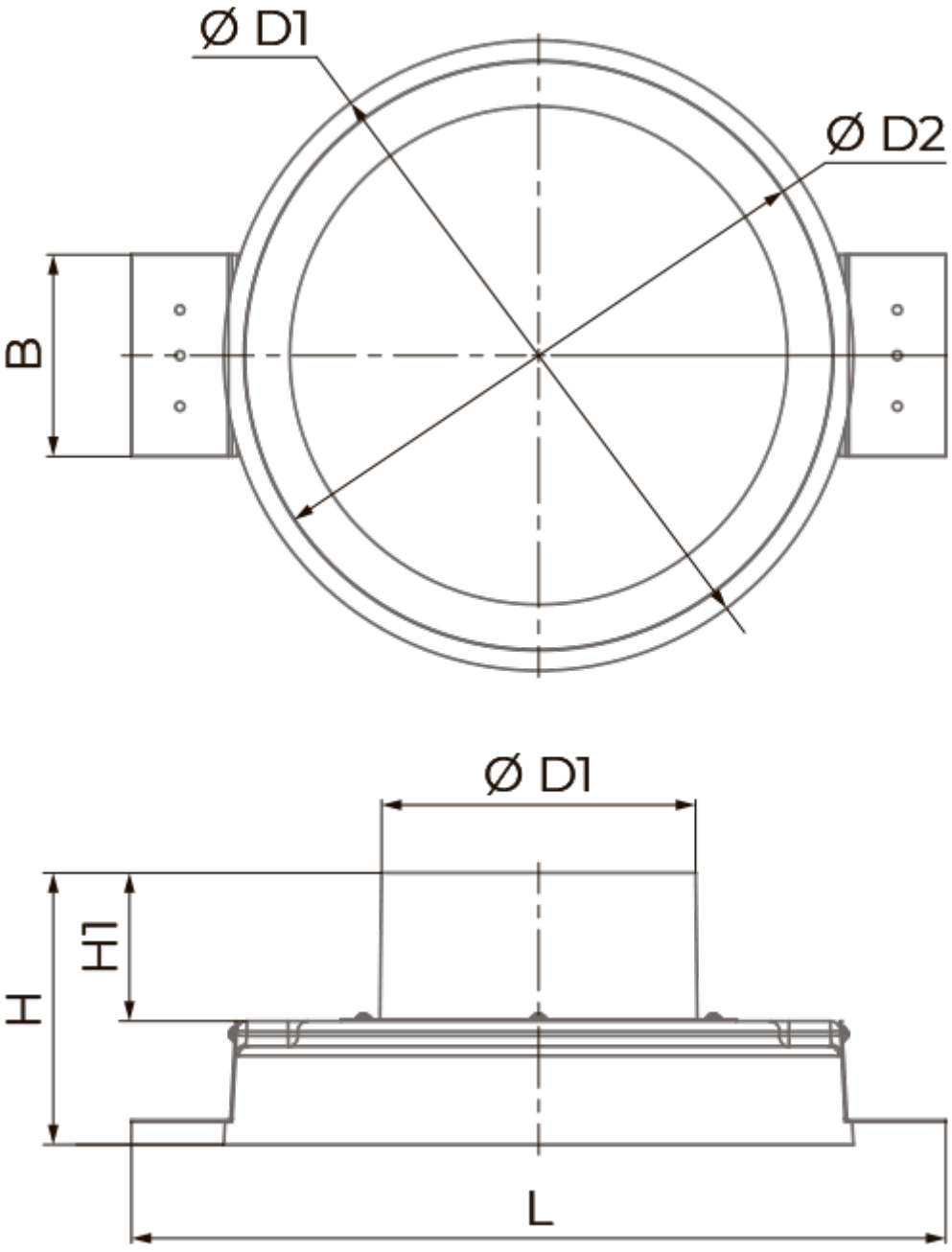
Ø D1
Ø D2
B
Ø D1
H1
H
L