

CIVIC EC D1BE2 500 S21 V.2

The CIVIC EC DB V.2 units are designed for single-room ventilation of schools, offices and other public and commercial premises

- Power of electrical preheater: 1050
- Power of electrical reheater: 700
- Sound pressure level LpA at 1 m: 44
- Heat exchanger type: Counter flow
- Heat exchanger material: Polystyrene
- Sound-insulated casing
- Bypass: Auto
- Reheater: Built-in
- Preheater: Built-in
- BMS protocol: ModBus
- Control: Smartphone
- Casing material: Coated steel
- Humidity sensor: Optional
- CO2 sensor: Optional
- PM2.5 sensor: Optional
- Temperature sensor: Built-in

	Unit of measurement	CIVIC EC D1BE2 500 S21 V.2
Phases	-	1
Minimum supply voltage	V	230
Maximum supply voltage	V	230
Power supply frequency	Hz	50/60
Power of electrical preheater	W	1050
Power of electrical reheater	W	700
Maximum airflow	m³/h	510
Sound pressure level LpA at 1 m	dB(A)	44
Heat recovery efficiency, max	%	96
Heat exchanger type	-	Counter flow
Heat exchanger material	-	Polystyrene
Weight	kg	95
Transported air temperature (max)	°C	40
Transported air temperature (min)	°C	-25
Ambient air temperature min	°C	1
Ambient air temperature max	°C	40
Ingress protection rating	-	IP20
Ingress protection rating of the drive	-	IP44
Ambient air humidity max	%	60

Minimum wall thickness	mm	100
Maximum wall thickness	mm	2000

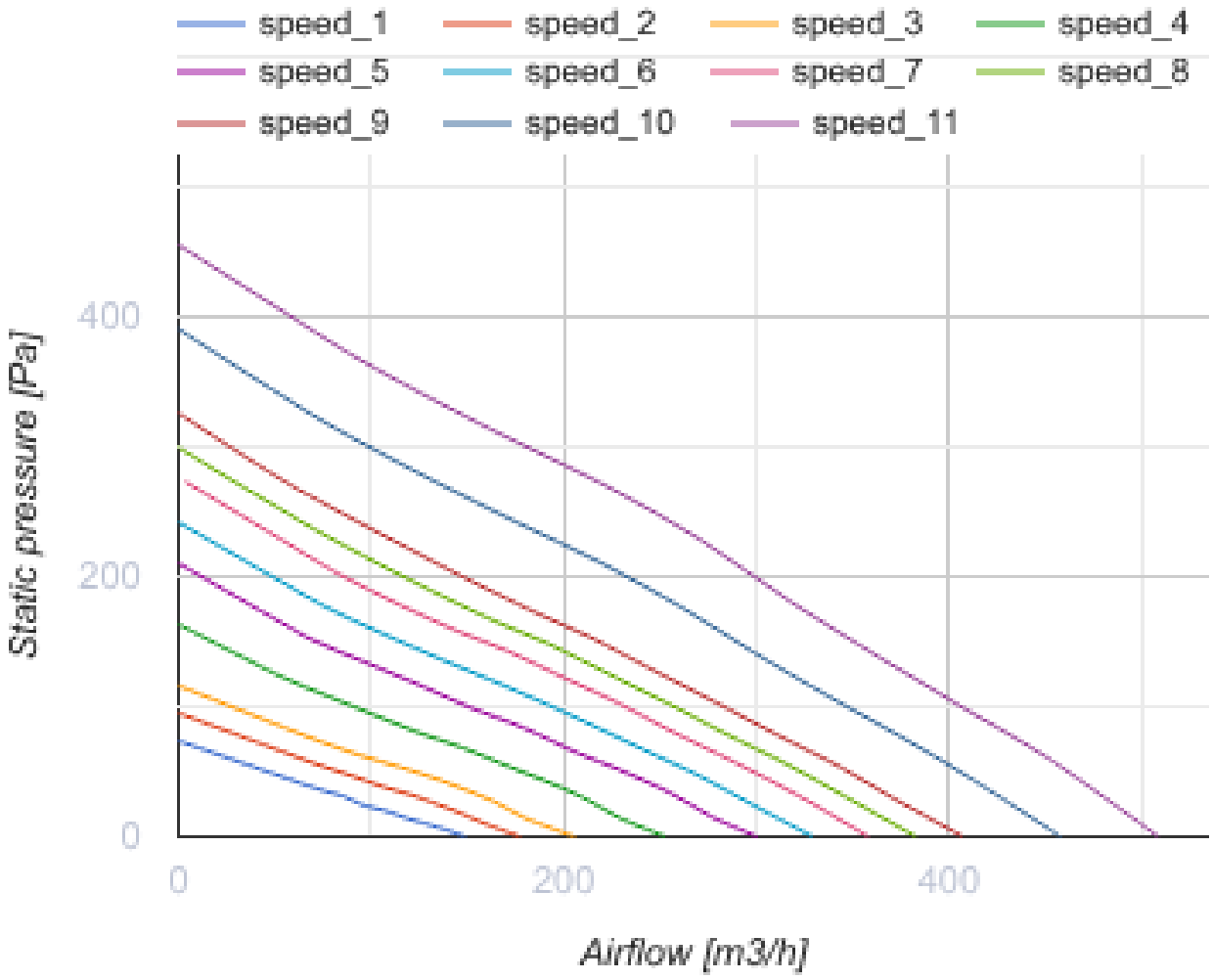

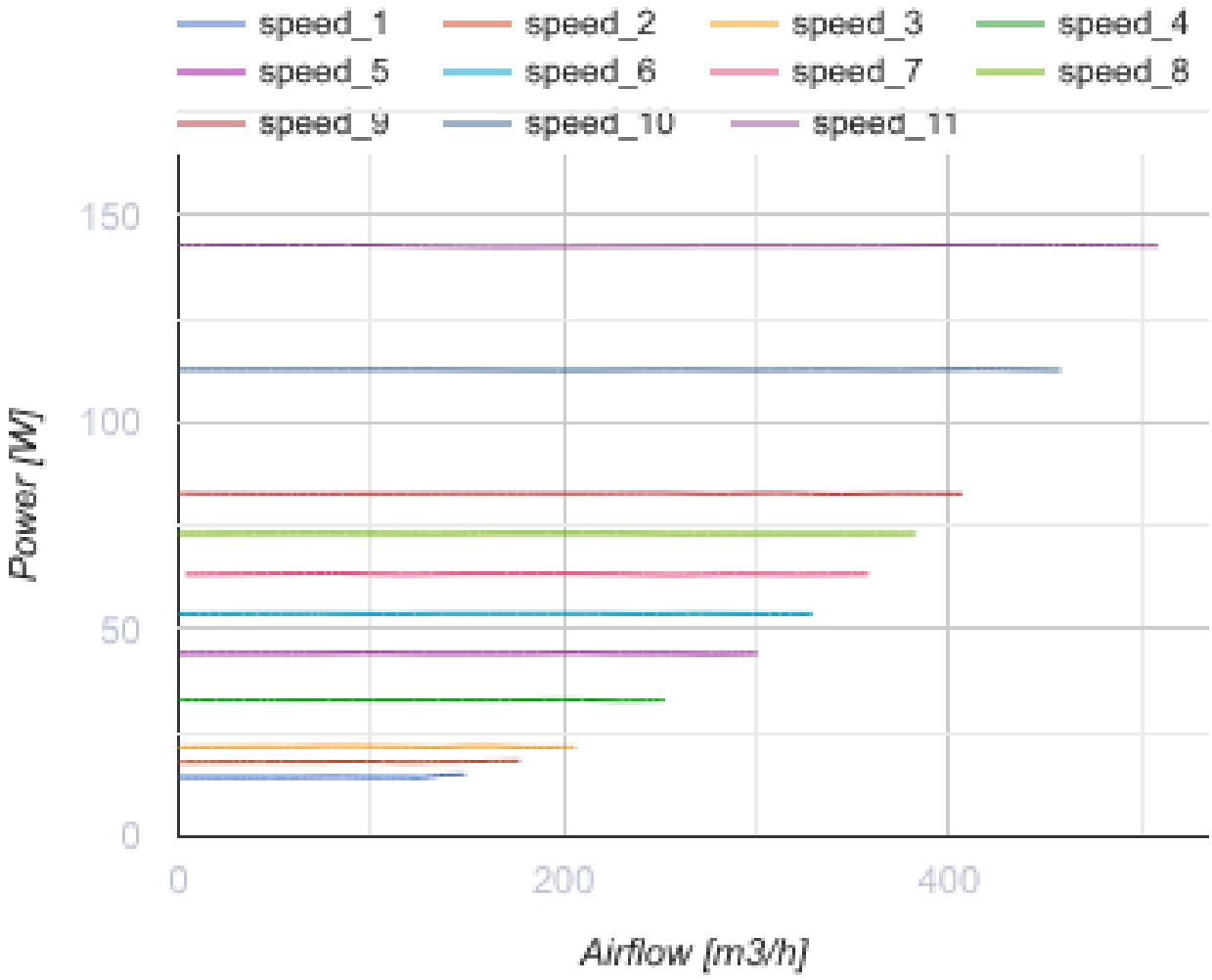

Dimensions

ØD	H	H1	H2	L	L1	L2	L3	L4	W / B	W1 / B1	W2 / B2	W3 / B3
250	458	509	45	1500	964	268	1422	504	1186	181	530	304

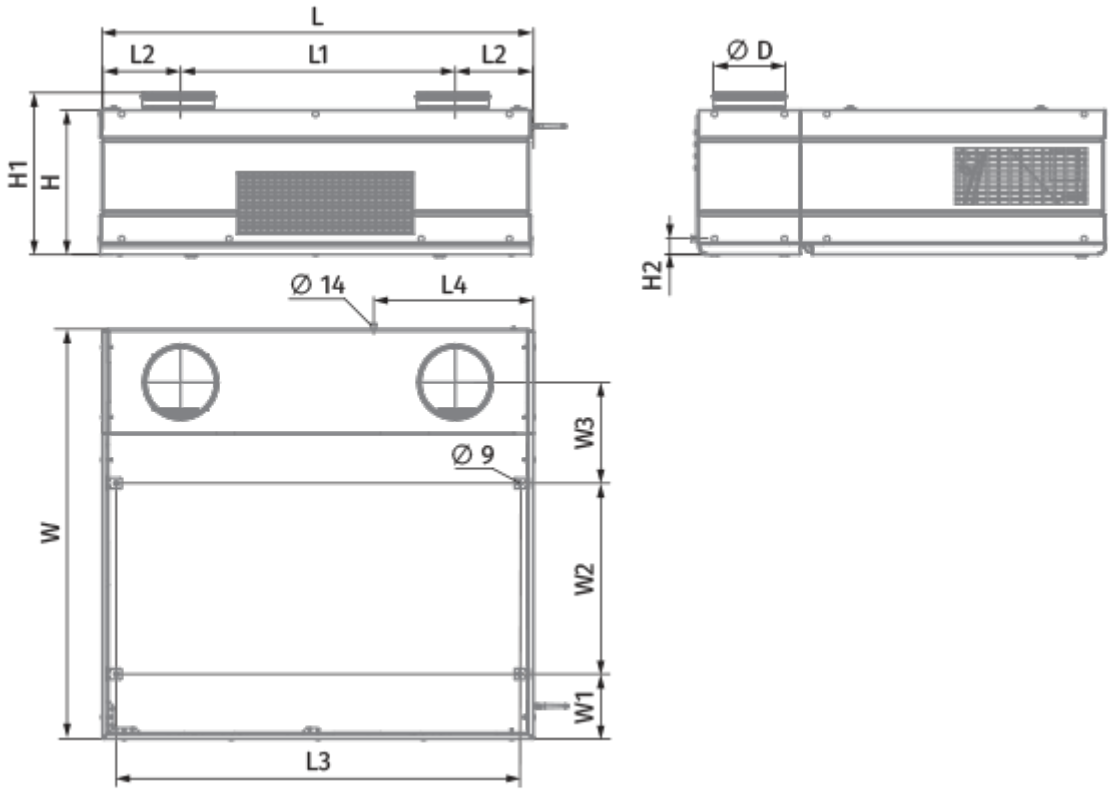

Accessories

Condensation drainage

Name	Photo	Description
SFK 20x32		Hydraulic syphon for condensate drainage
CP-2		Drain pump

Control Panels

Name	Photo	Description
S25		LCD control panel
S22		Control panels
S22 Wi-Fi		Control panels

CO2 sensors

Name	Photo	Description
CD-1		CO2 sensors
CD-2		CO2 sensors
CD-3		Carbon dioxide sensor

Humidity sensors

Name	Photo	Description
FS2		Humidity sensor
HR-S		Electro-mechanical humidistat
DPWC11200		Humidity and temperature sensor

VOC sensors

Name	Photo	Description
DPWQ30600		VOC sensor
DPWQ40200		CO2 sensor

Other accessories

Name	Photo	Description
FP 379x254x48 F7		F7 panel filter
FP 379x334x48 G4		G4 panel filter

Cooker Hoods

Name	Photo	Description
VDC Civic 500 DB		Module of vertical duct connection