

Centro-MZ 200 max

Centrifugal inline fans in galvanized casings

• Impeller type: Centrifugal impeller with backward curved blades
• Casing material: Galvanized steel
• Installation in any position

	Unit of measurement	Centro-MZ 200 max	
Phases	-	1	
Maximum supply voltage	V	240	
Minimum supply voltage	V	220	
Power supply frequency	Hz	50	60
Maximum airflow	m³/h	1110	
Weight	kg	5.6	
Transported air temperature (max)	°C	50	
Transported air temperature (min)	°C	-25	
Ingress protection rating	-	IPX4	
Ingress protection rating of the drive	-	IP44	
Impeller material	-	Plastic	

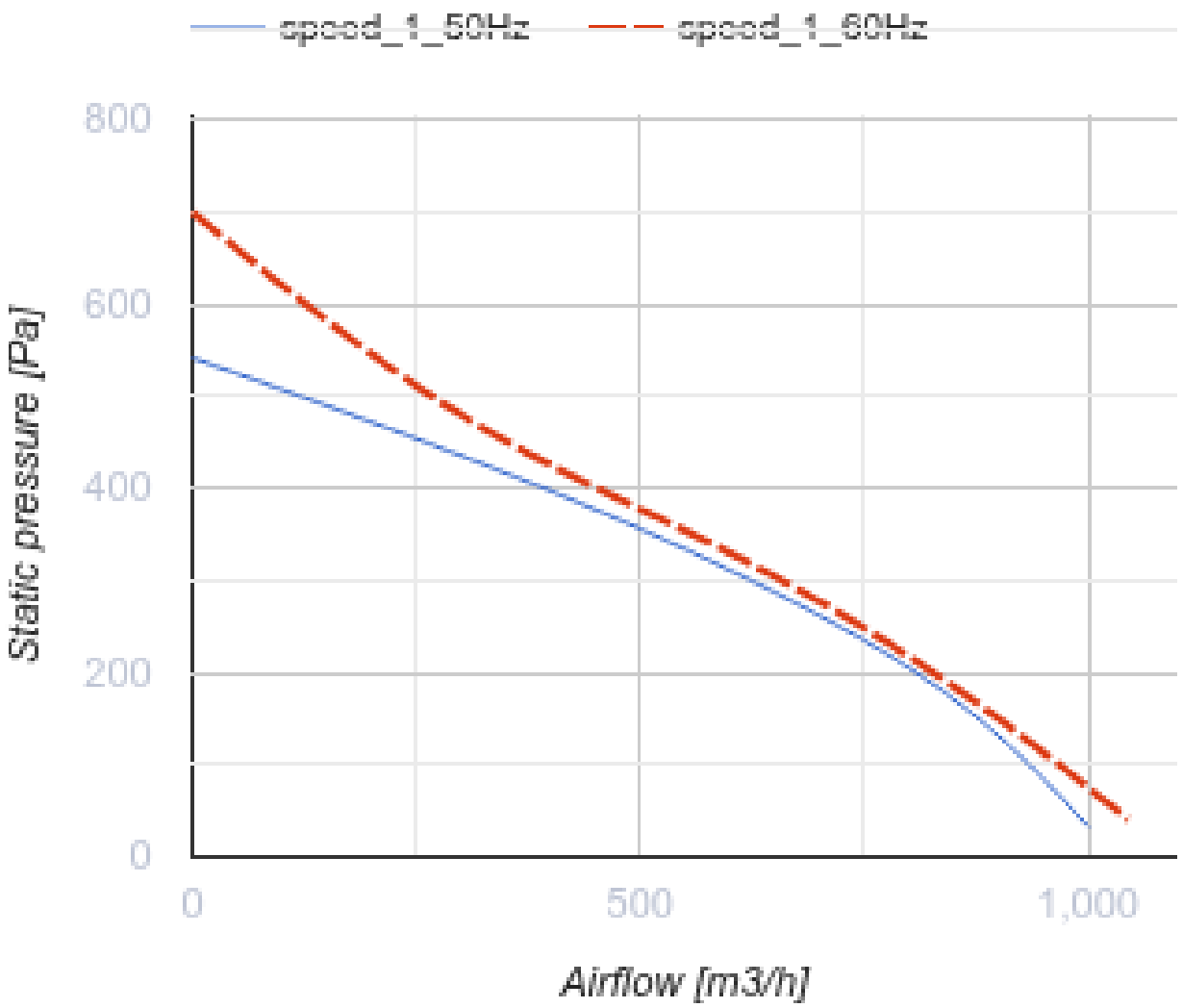
speed_1_50Hz
speed_1_60Hz
800
600
400
200
0
Static pressure [Pa]
0
500
1,000
Airflow [m3/h]

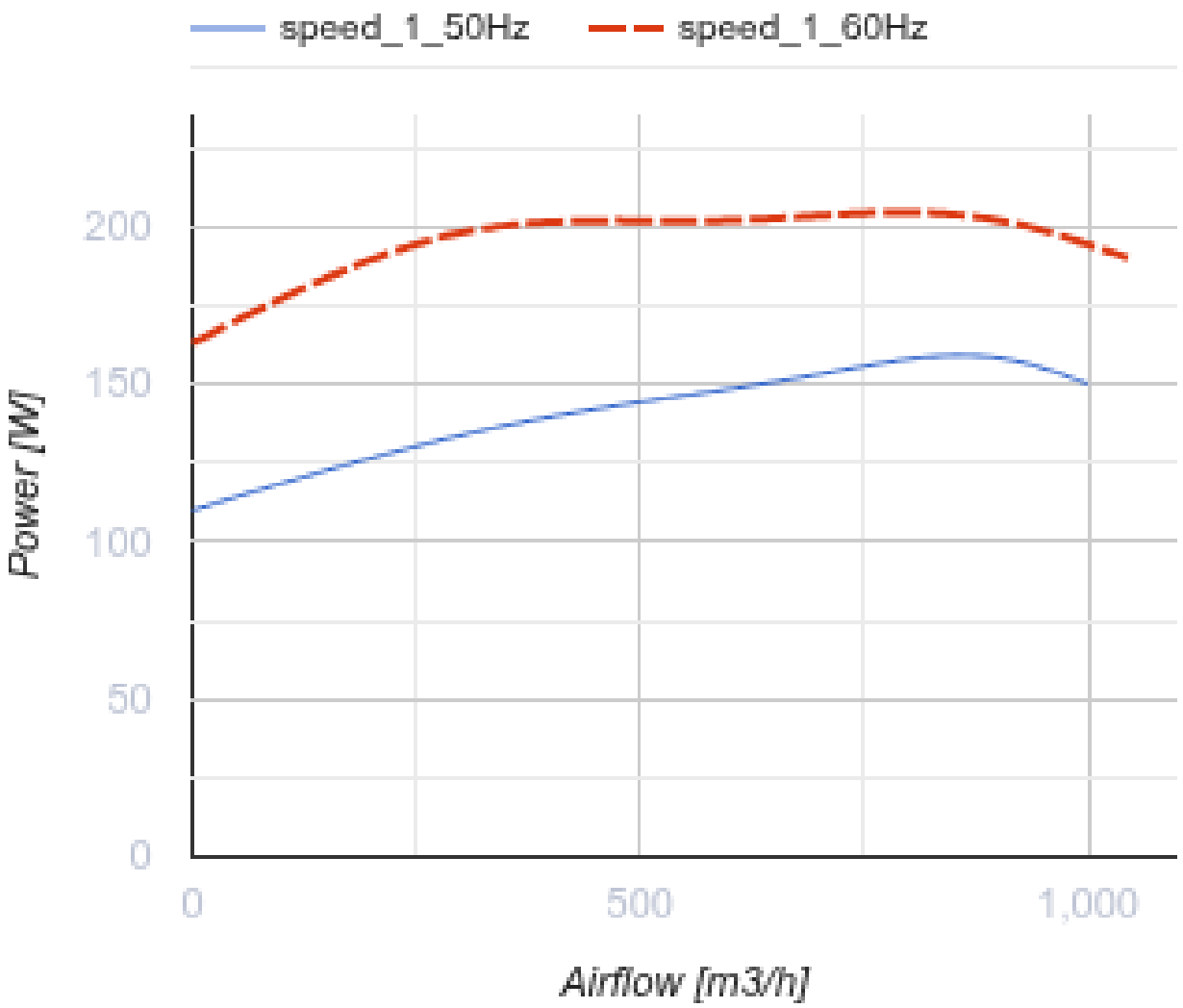

Dimensions

ØD	ØD1	B	B1	L	L1	L2	L3
198	345	355	395	245	25	25	40

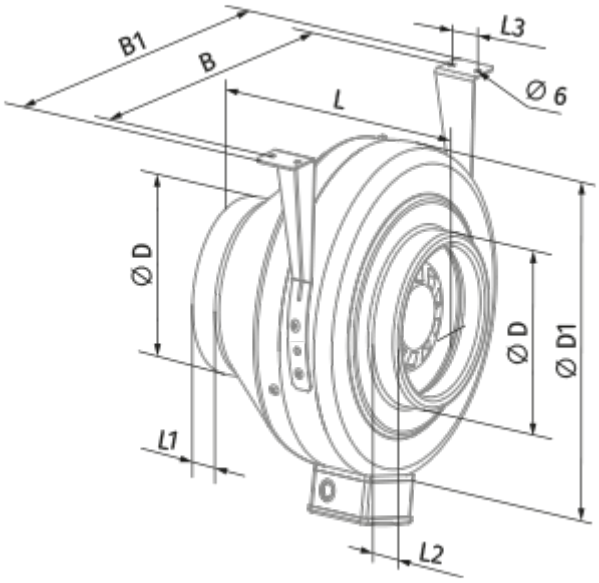
B1
B
L
L3
Ø 6
Ø D
Ø D
Ø D1
L1
L2

Ecodesign

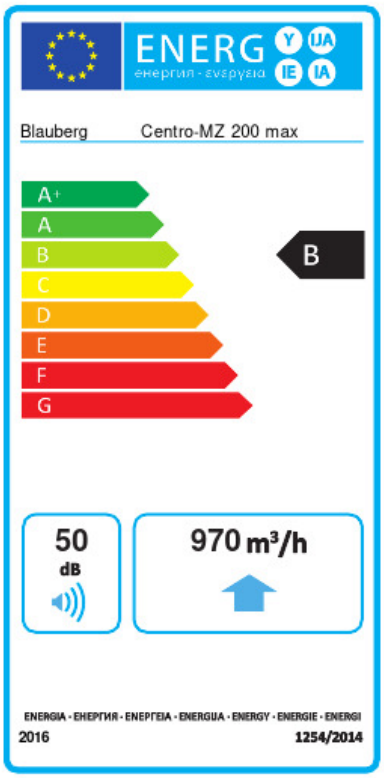

Trademark	Blauberg					
Model	Centro-MZ 200 max					
Specific energy consumption (SEC) (kWh/(m²/a))	Cold		Average		Warm	
	-53.1	A+	-26.1	B	-10.6	E
Type of ventilation unit	Unidirectional					
Type of drive installed	Variable speed					
Type of heat recovery system	None					
Maximum flow rate (m³/h)	970					
Electric power input (W)	163					
Reference flow rate (m³/s)	0.189					
Reference pressure difference (Pa)	50					
Specific power input (SPI) (W/(m³/h))	0.168					
Control typology	Local demand control					
Maximum external leakage rates (%)	2.7					
Sound power level (dB(A))	50					
Declared typology	RVU UVU					
The annual electricity consumption (AEC) (kWh/a)	Cold		Average		Warm	
	89		89		89	
The annual heating saved (AHS) (kWh/a)	Cold		Average		Warm	
	5536		2830		1280	