

# Centro-MZ 160

Centrifugal inline fans in galvanized casings

• Impeller type: Centrifugal impeller with backward curved blades
• Casing material: Galvanized steel
• Installation in any position

| | Unit of measurement | Centro-MZ 160 | |
|---|---|---|---|
| Phases | - | 1 | |
| Minimum supply voltage | V | 220 | |
| Maximum supply voltage | V | 240 | |
| Power supply frequency | Hz | 50 | 60 |
| Maximum airflow | m³/h | 450 | |
| Weight | kg | 3.2 | |
| Transported air temperature (max) | °C | 55 | |
| Transported air temperature (min) | °C | -25 | |
| Ingress protection rating | - | IPX4 | |
| Ingress protection rating of the drive | - | IP44 | |
| Impeller material | - | Plastic | |

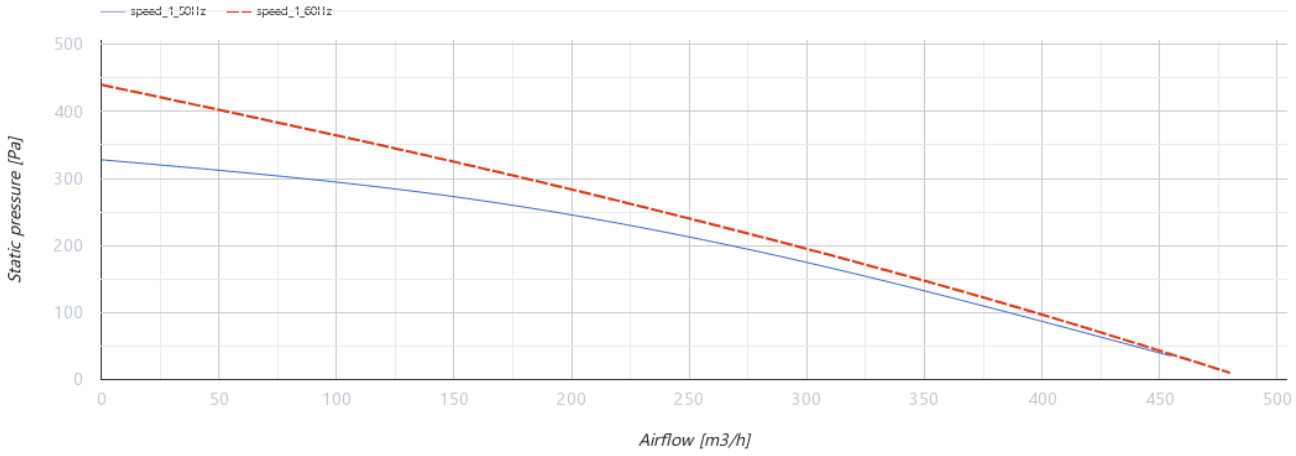


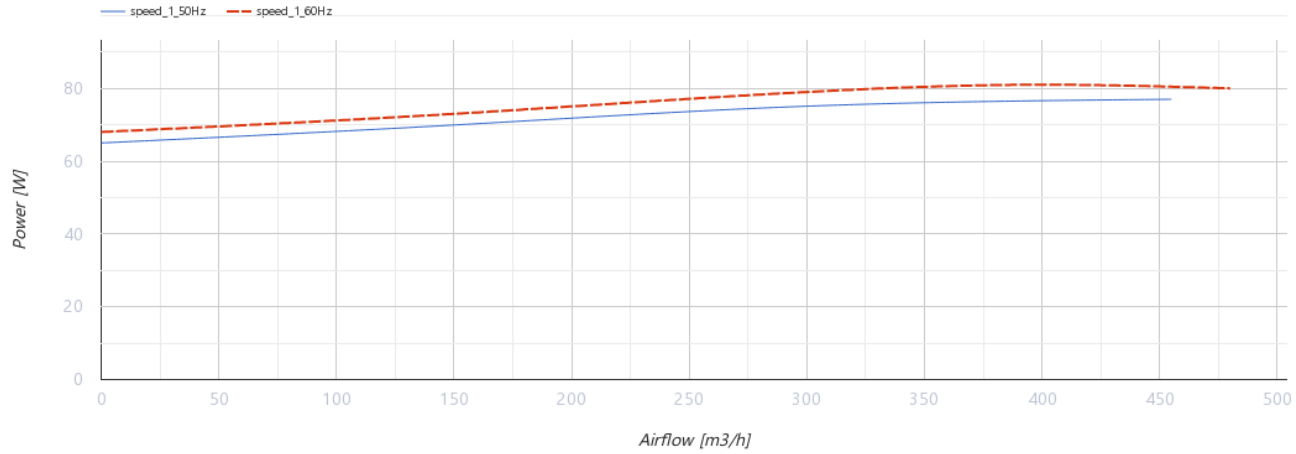


## Dimensions

| Ø D | Ø D1 | B | B1 | L | L1 | L2 | L3 |
|---|---|---|---|---|---|---|---|
| 159 | 274 | 290 | 330 | 170 | 20 | 20 | 30 |

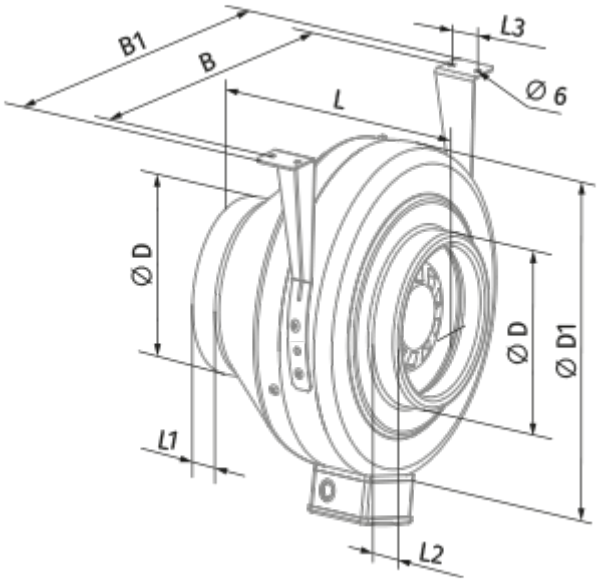
B1
B
L
L3
Ø 6
Ø D
Ø D
Ø D1
L1
L2

## Ecodesign

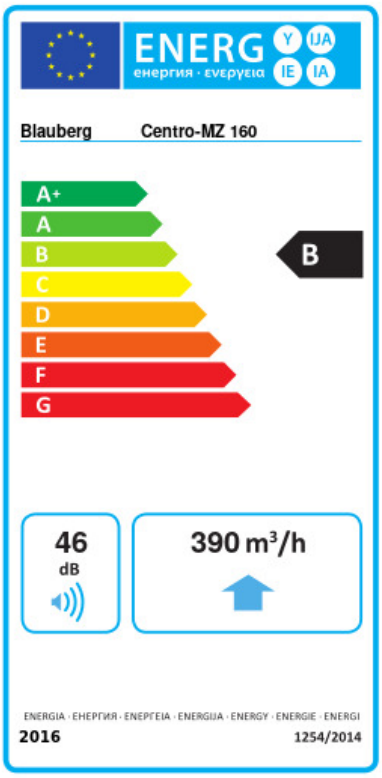


| Trademark | Blauberg | | | | | |
|---|---|---|---|---|---|---|
| Model | Centro-MZ 160 | | | | | |
| Specific energy consumption (SEC) (kWh/(m²/a)) | Cold | | Average | | Warm | |
| | -53.3 | A+ | -26.2 | B | -10.7 | E |
| Type of ventilation unit | Unidirectional | | | | | |
| Type of drive installed | Variable speed | | | | | |
| Type of heat recovery system | None | | | | | |
| Maximum flow rate (m³/h) | 390 | | | | | |
| Electric power input (W) | 78 | | | | | |
| Reference flow rate (m³/s) | 0.076 | | | | | |
| Reference pressure difference (Pa) | 50 | | | | | |
| Specific power input (SPI) (W/(m³/h)) | 0.157 | | | | | |
| Control typology | Local demand control | | | | | |
| Maximum external leakage rates (%) | 2.7 | | | | | |
| Declared typology | RVU UVU | | | | | |
| Sound power level (dB(A)) | 46 | | | | | |
| The annual electricity consumption (AEC) (kWh/a) | Cold | | Average | | Warm | |
| | 83 | | 83 | | 83 | |
| The annual heating saved (AHS) (kWh/a) | Cold | | Average | | Warm | |
| | 5536 | | 2830 | | 1280 | |

## Accessories

### For round ducts

| Name | Photo | Description |
|---|---|---|
| SD 160/600 |  | Silencers for round ducts |
| SD 160/900 |  | Silencers for round ducts |
| SD 160/1200 |  | Silencers for round ducts |

### For round ducts

| Name | Photo | Description |
|---|---|---|
| KFBK 160 |  | Filter boxes for round ducts |
| KFBT 160 G4 | 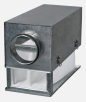 | Filter boxes with pocket filters for round ducts |
| KFBT 160 F5 |  | Filter boxes with pocket filters for round ducts |
| KFBT 160 F7 |  | Filter boxes with pocket filters for round ducts |

### For round ducts

| Name | Photo | Description |
|---|---|---|
| VRV 160 |  | Backdraft dampers with spring for round ducts |
| VKA 160 |  | Air dampers for round ducts |

### Water heaters

| Name | Photo | Description |
|---|---|---|
| WKH 160-2 |  | Duct water heaters for round ducts |
| WKH 160-4 |  | Duct water heaters for round ducts |

### Electrical heaters

| Name | Photo | Description |
|---|---|---|
| EKH 160-1.2 |  | Duct electrical heaters for round ducts |
| EKH 160-1.7 |  | Duct electrical heaters for round ducts |

| | | |
|---|---|---|
| EKH 160-2.0 |  | Duct electrical heaters for round ducts |
| EKH 160-2.4 |  | Duct electrical heaters for round ducts |
| EKH 160-3.4 |  | Duct electrical heaters for round ducts |

### Speed controllers

| Name | Photo | Description |
|---|---|---|
| CDT E1.8 |  | Thyristor speed controller |
| CDT1 E0.5 |  | Multi-speed switches |
| CDTE E1.5 TP |  | Speed controllers |

### Fittings

| Name | Photo | Description |
|---|---|---|
| K 160 |  | Clamp for round flexible ducts |
| K 160 Zn |  | Clamp for round flexible ducts |