

Centro-MZ 125

Centrifugal inline fans in galvanized casings

• Impeller type: Centrifugal impeller with backward curved blades
• Casing material: Galvanized steel
• Installation in any position

	Unit of measurement	Centro-MZ 125	
Phases	-	1	
Minimum supply voltage	V	220	
Maximum supply voltage	V	240	
Power supply frequency	Hz	50	60
Maximum airflow	m³/h	350	
Weight	kg	2.9	
Transported air temperature (max)	°C	55	
Transported air temperature (min)	°C	-25	
Ingress protection rating	-	IPX4	
Ingress protection rating of the drive	-	IP44	
Impeller material	-	Plastic	

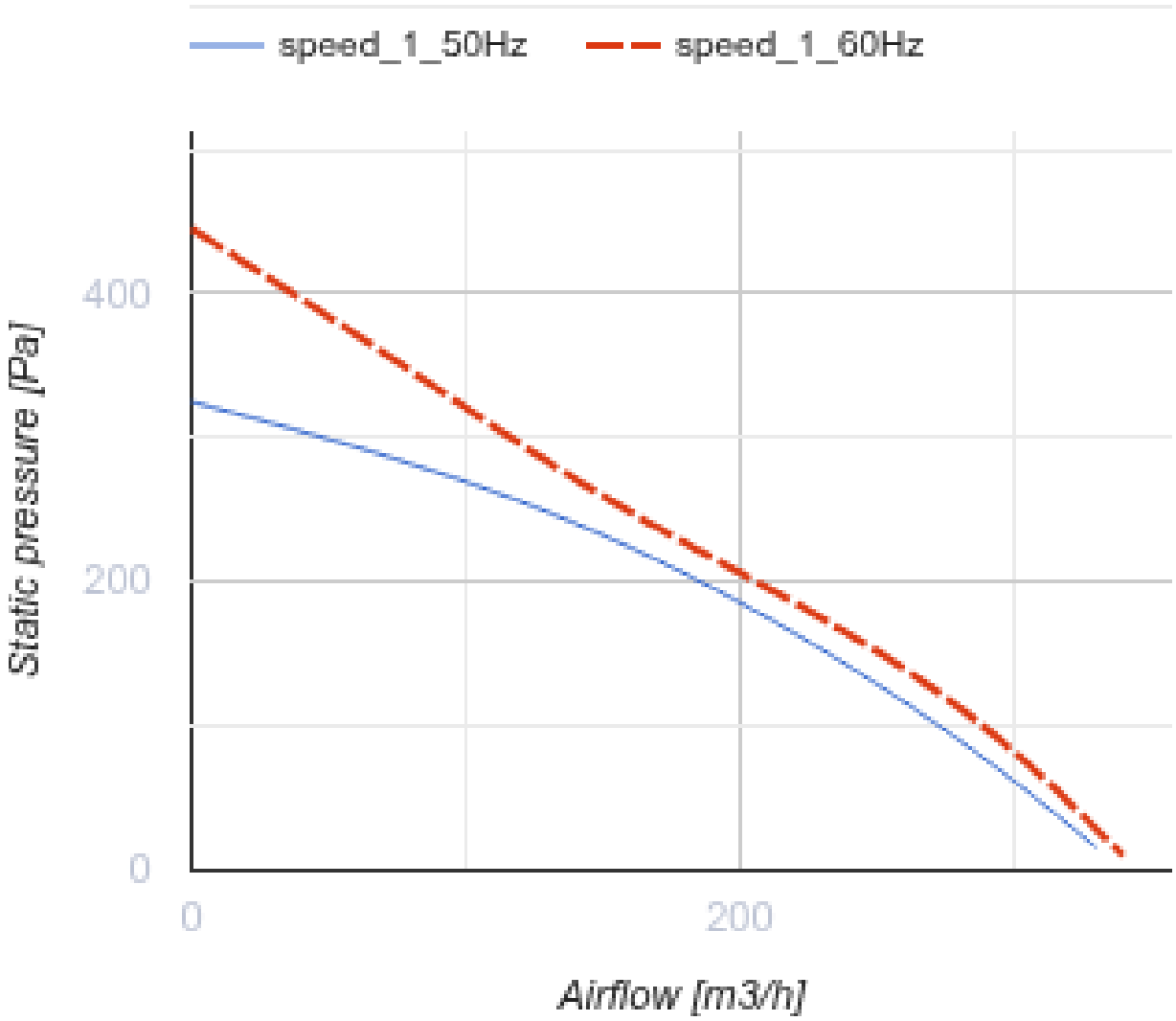
speed_1_50Hz
speed_1_60Hz
400
200
0
Static pressure [Pa]
0
200
Airflow [m3/h]

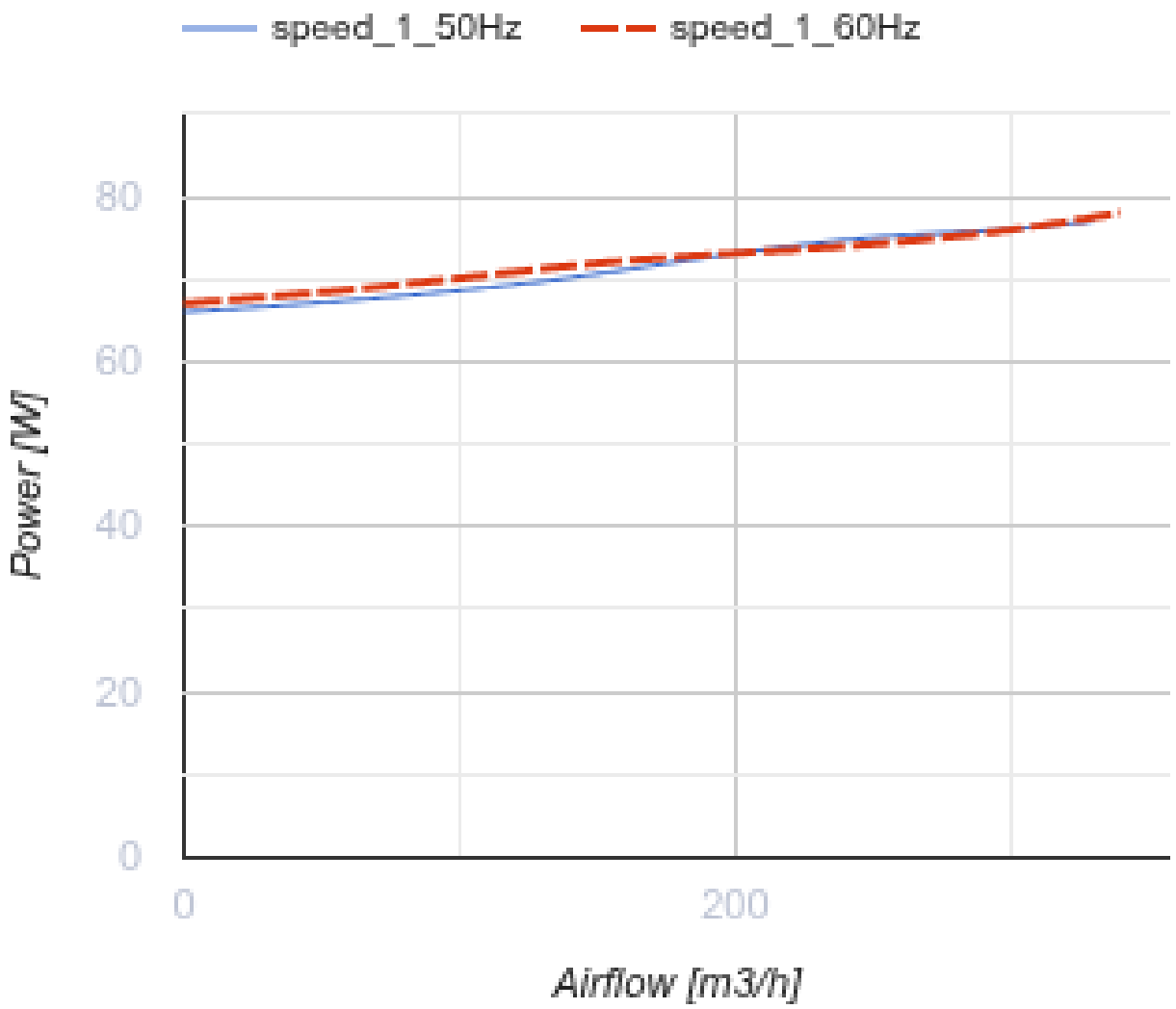

Dimensions

Ø D	Ø D1	B	B1	L	L1	L2	L3
124	245	259	299	190	20	20	30

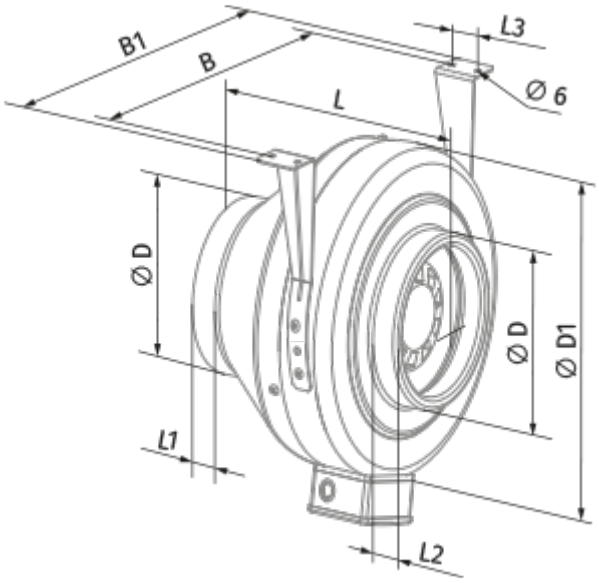
B1
B
L
L3
Ø 6
Ø D
Ø D
Ø D1
L1
L2

Ecodesign

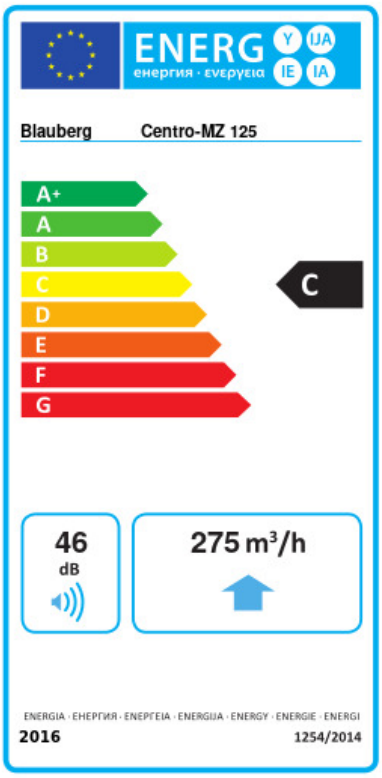

Trademark	Blauberg					
Model	Centro-MZ 125					
Specific energy consumption (SEC) (kWh/(m²/a))	Cold		Average		Warm	
	-52.4	A+	-25.4	C	-9.8	F
Type of ventilation unit	Unidirectional					
Type of drive installed	Variable speed					
Type of heat recovery system	None					
Maximum flow rate (m³/h)	275					
Electric power input (W)	78					
Reference flow rate (m³/s)	0.053					
Reference pressure difference (Pa)	50					
Specific power input (SPI) (W/(m³/h))	0.223					
Control typology	Local demand control					
Maximum external leakage rates (%)	2.7					
Declared typology	RVU UVU					
Sound power level (dB(A))	46					
The annual electricity consumption (AEC) (kWh/a)	Cold		Average		Warm	
	118		118		118	
The annual heating saved (AHS) (kWh/a)	Cold		Average		Warm	
	5536		2830		1280	

Accessories

For round ducts

Name	Photo	Description
SD 125/600		Silencers for round ducts
SD 125/900		Silencers for round ducts
SD 125/1200		Silencers for round ducts

For round ducts

Name	Photo	Description
KFBK 125		Filter boxes for round ducts
KFBT 125 G4	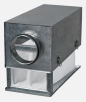	Filter boxes with pocket filters for round ducts
KFBT 125 F5		Filter boxes with pocket filters for round ducts
KFBT 125 F7		Filter boxes with pocket filters for round ducts

For round ducts

Name	Photo	Description
VRV 125		Backdraft dampers with spring for round ducts
VKA 125		Air dampers for round ducts

Water heaters

Name	Photo	Description
WKH 125-2		Duct water heaters for round ducts
WKH 125-4		Duct water heaters for round ducts

Electrical heaters

Name	Photo	Description
EKH 125-0.6		Duct electrical heaters for round ducts
EKH 125-0.8		Duct electrical heaters for round ducts

EKH 125-1.2		Duct electrical heaters for round ducts
EKH 125-1.6		Duct electrical heaters for round ducts
EKH 125-2.4		Duct electrical heaters for round ducts

Speed controllers

Name	Photo	Description
CDT E1.8		Thyristor speed controller
CDT1 E0.5		Multi-speed switches
CDTE E1.5 TP		Speed controllers

Fittings

Name	Photo	Description
K 125		Clamp for round flexible ducts
K 125 Zn		Clamp for round flexible ducts