

Centro-MZ 100 L

Centrifugal inline fans in galvanized casings

• Impeller type: Centrifugal impeller with backward curved blades
• Casing material: Galvanized steel
• Installation in any position

	Unit of measurement	Centro-MZ 100 L	
Phases	-	1	
Minimum supply voltage	V	220	
Maximum supply voltage	V	240	
Power supply frequency	Hz	50	60
Maximum airflow	m³/h	230	
Weight	kg	2.5	
Transported air temperature (max)	°C	55	
Transported air temperature (min)	°C	-25	
Ingress protection rating	-	IPX4	
Ingress protection rating of the drive	-	IP44	
Impeller material	-	Plastic	

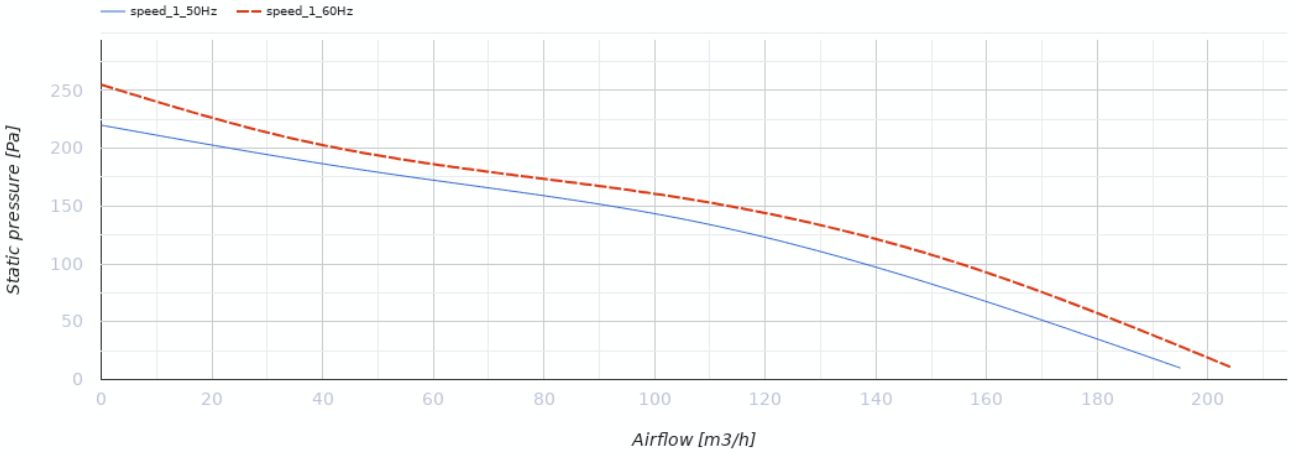

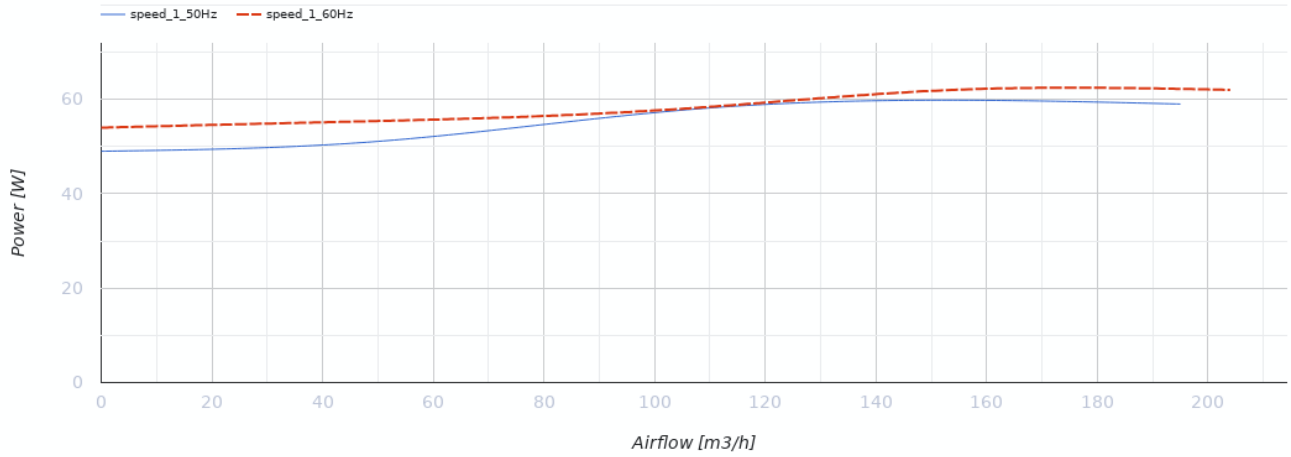

Dimensions

Ø D	Ø D1	B	B1	L	L1	L2	L3
99	245	259	299	190	20	20	30

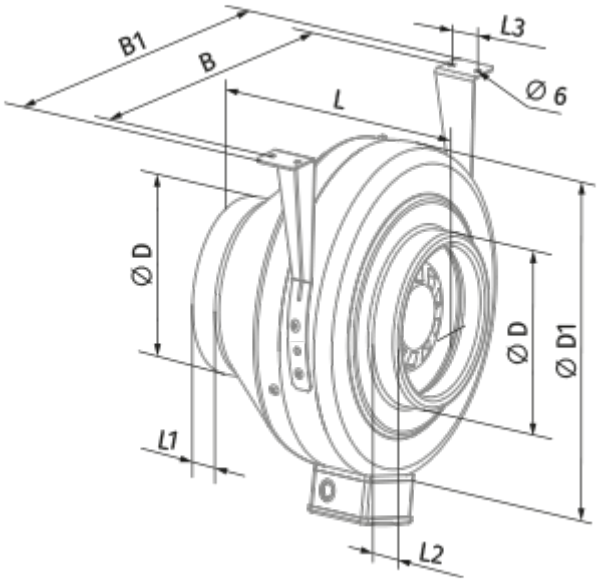
B1
B
L
L3
Ø 6
Ø D
Ø D
Ø D1
L1
L2

Ecodesign

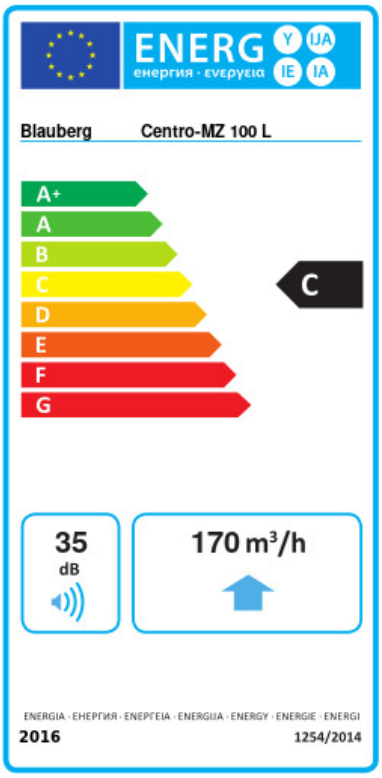

Trademark	Blauberg					
Model	Centro-MZ 100 L					
Specific energy consumption (SEC) (kWh/(m²/a))	Cold		Average		Warm	
	-52.2	A+	-25.1	C	-9.6	F
Type of ventilation unit	Unidirectional					
Type of drive installed	Variable speed					
Type of heat recovery system	None					
Maximum flow rate (m³/h)	170					
Electric power input (W)	41					
Reference flow rate (m³/s)	0.033					
Reference pressure difference (Pa)	50					
Specific power input (SPI) (W/(m³/h))	0.241					
Control typology	Local demand control					
Maximum external leakage rates (%)	2.7					
Declared typology	RVU UVU					
Sound power level (dB(A))	35					
The annual electricity consumption (AEC) (kWh/a)	Cold		Average		Warm	
	128		128		128	
The annual heating saved (AHS) (kWh/a)	Cold		Average		Warm	
	5536		2830		1280	

Accessories

For round ducts

Name	Photo	Description
SD 100/600		Silencers for round ducts
SD 100/900		Silencers for round ducts
SD 100/1200		Silencers for round ducts

For round ducts

Name	Photo	Description
KFBK 100		Filter boxes for round ducts
KFBT 100 G4	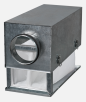	Filter boxes with pocket filters for round ducts
KFBT 100 F5		Filter boxes with pocket filters for round ducts
KFBT 100 F7		Filter boxes with pocket filters for round ducts

For round ducts

Name	Photo	Description
VRV 100		Backdraft dampers with spring for round ducts
VKA 100		Air dampers for round ducts

Water heaters

Name	Photo	Description
WKH 100-2		Duct water heaters for round ducts
WKH 100-4		Duct water heaters for round ducts

Electrical heaters

Name	Photo	Description
EKH 100-0.6		Duct electrical heaters for round ducts
EKH 100-0.8		Duct electrical heaters for round ducts

EKH 100-1.2		Duct electrical heaters for round ducts
EKH 100-1.6		Duct electrical heaters for round ducts
EKH 100-1.8		Duct electrical heaters for round ducts

Speed controllers

Name	Photo	Description
CDT E1.8		Thyristor speed controller
CDT1 E0.5		Multi-speed switches
CDTE E1.5 TP		Speed controllers

Fittings

Name	Photo	Description
K 100		Clamp for round flexible ducts
K 100 Zn		Clamp for round flexible ducts