

Centro-M EC 315

Centrifugal inline fans with EC-motors

• Impeller type: Centrifugal impeller with backward curved blades
• Casing material: Coated steel
• Installation in any position

	Unit of measurement	Centro-M EC 315
Phases	-	1
Minimum supply voltage	V	230
Maximum supply voltage	V	230
Power supply frequency	Hz	50/60
Maximum airflow	m^3/h	1370
Weight	kg	7.3
Transported air temperature (max)	°C	60
Transported air temperature (min)	°C	-25
Ingress protection rating	-	IPX4
Ingress protection rating of the drive	-	IP44
Impeller material	-	Plastic

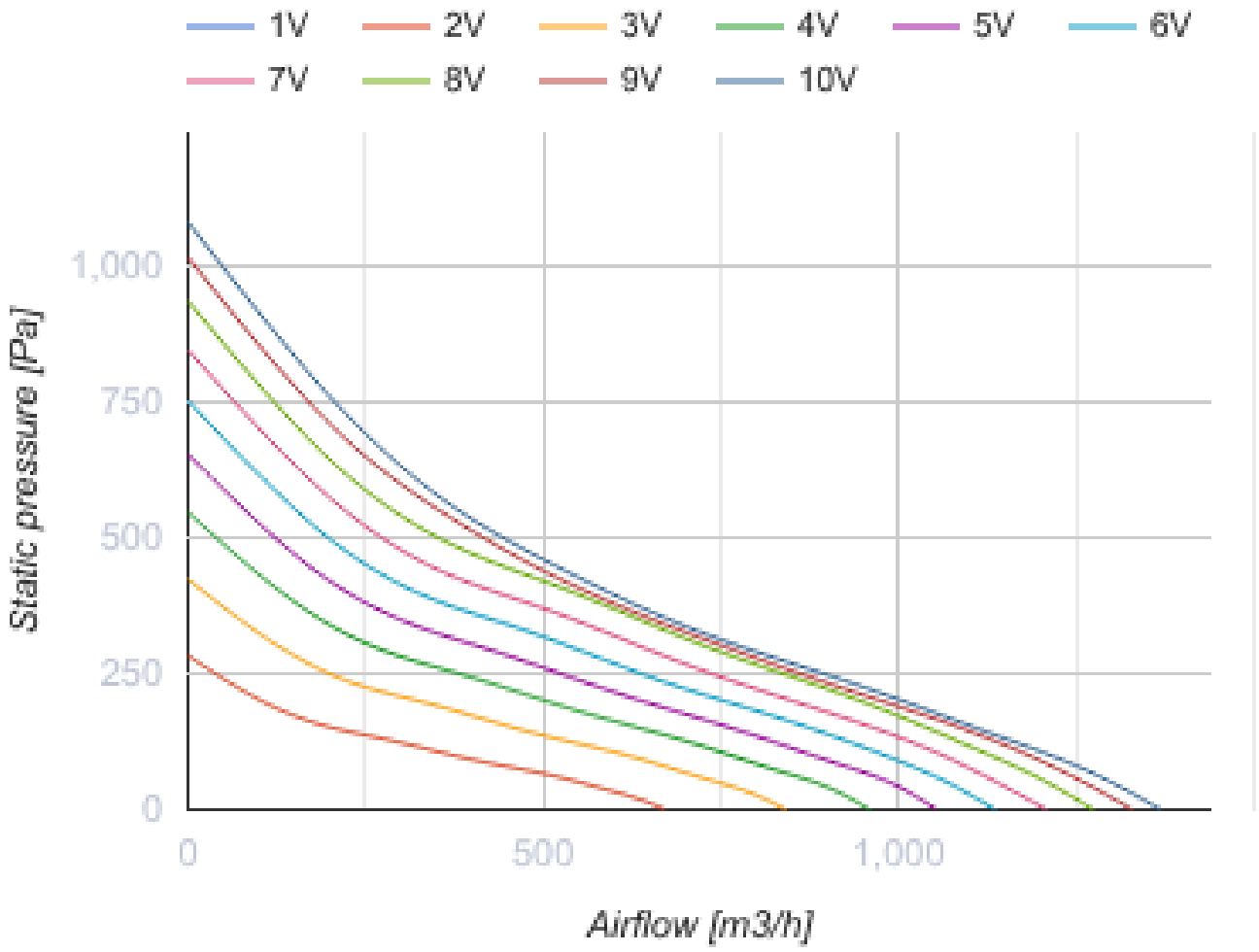
1V
2V
3V
4V
5V
6V
7V
8V
9V
10V
1,000
750
500
250
0
Static pressure [Pa]
0
500
1,000
Airflow [m3/h]

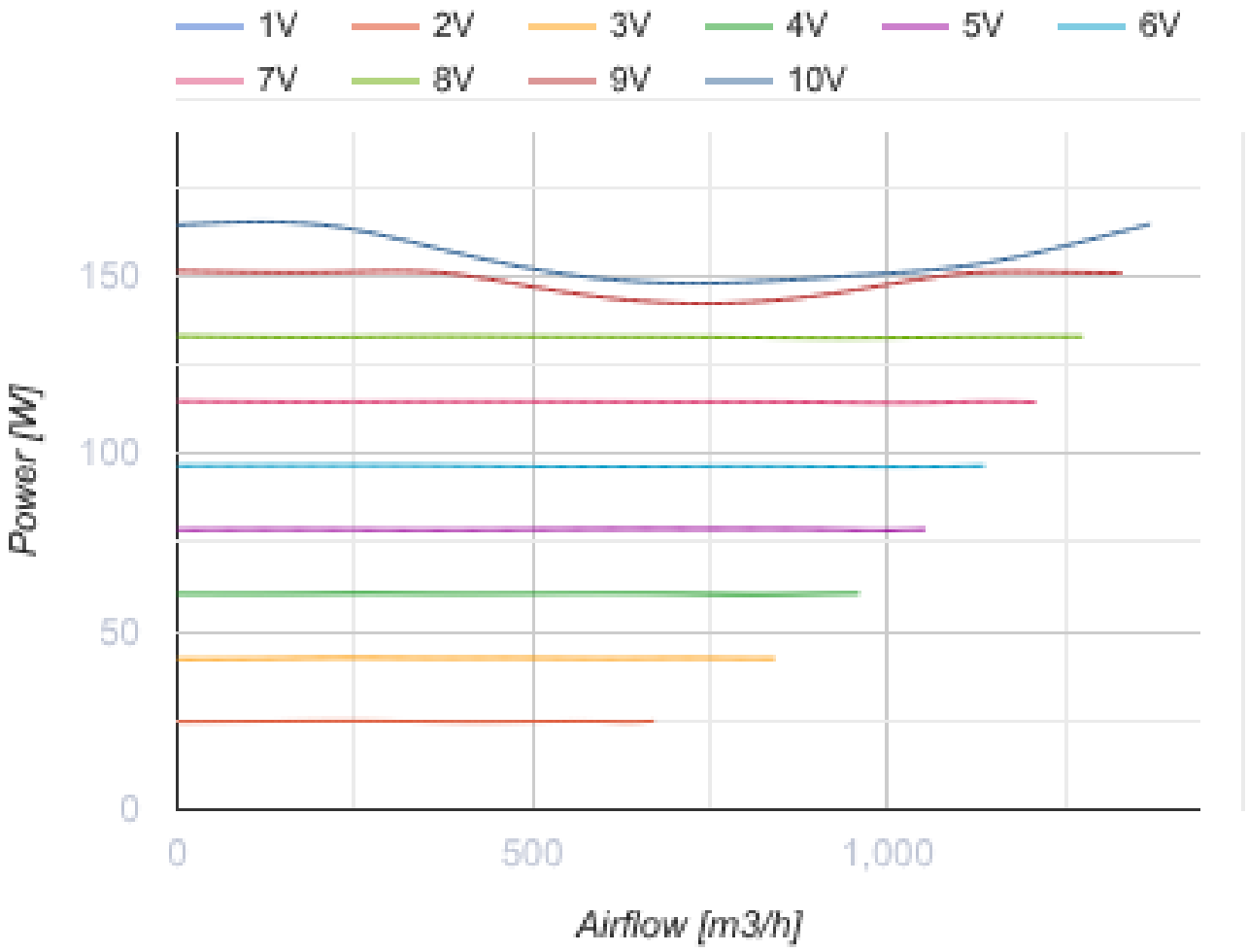

Dimensions

ØD	ØD1	B	B1	L	L1	L2	L3	H
314	405	455	415	260	30	30	40	465

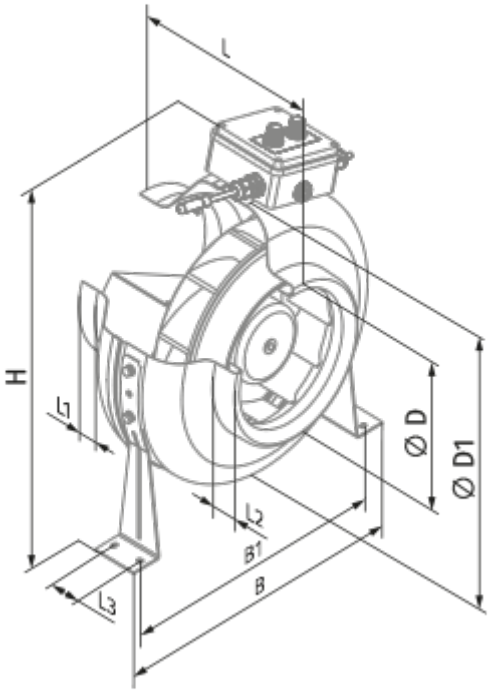
L
H
L1
L2
L3
B1
B
Ø D
Ø D1

Ecodesign

Trademark	Blauberg
Model	Centro-M EC 315
Type of ventilation unit	Unidirectional
Type of drive installed	Integrated VSD
Type of heat recovery system	None
Nominal external pressure (Pa)	314
Maximum external leakage rates (%)	2.7
Static efficiency (%)	52.1
Declared typology	NRVU UVU
Effective electric power input (kW)	0.142
Sound power level (dB(A))	68

Accessories

For round ducts

Name	Photo	Description
SD 315/600		Silencers for round ducts
SD 315/900		Silencers for round ducts
SD 315/1200		Silencers for round ducts

For round ducts

Name	Photo	Description
KFBK 315		Filter boxes for round ducts
KFBT 315 G4		Filter boxes with pocket filters for round ducts

KFBT 315 F5		Filter boxes with pocket filters for round ducts
KFBT 315 F7		Filter boxes with pocket filters for round ducts

For round ducts

Name	Photo	Description
VRV 315		Backdraft dampers with spring for round ducts
VKA 315		Air dampers for round ducts

Water heaters

Name	Photo	Description
WKH 315-2		Duct water heaters for round ducts
WKH 315-4		Duct water heaters for round ducts

Electrical heaters

Name	Photo	Description
EKH 315-1.2		Duct electrical heaters for round ducts
EKH 315-2.0		Duct electrical heaters for round ducts
EKH 315-2.4		Duct electrical heaters for round ducts

EC motors regulators

Name	Photo	Description

CDT E/0-10		Speed control for EC motors