

Centro-M EC 250 L

Centrifugal inline fans with EC-motors

• Impeller type: Centrifugal impeller with backward curved blades
• Casing material: Coated steel
• Installation in any position

	Unit of measurement	Centro-M EC 250 L
Phases	-	1
Minimum supply voltage	V	230
Maximum supply voltage	V	230
Power supply frequency	Hz	50/60
Maximum airflow	m^3/h	2500
Transported air temperature (max)	°C	60
Transported air temperature (min)	°C	-25
Ingress protection rating	-	IPX4
Ingress protection rating of the drive	-	IP44
Impeller material	-	Plastic

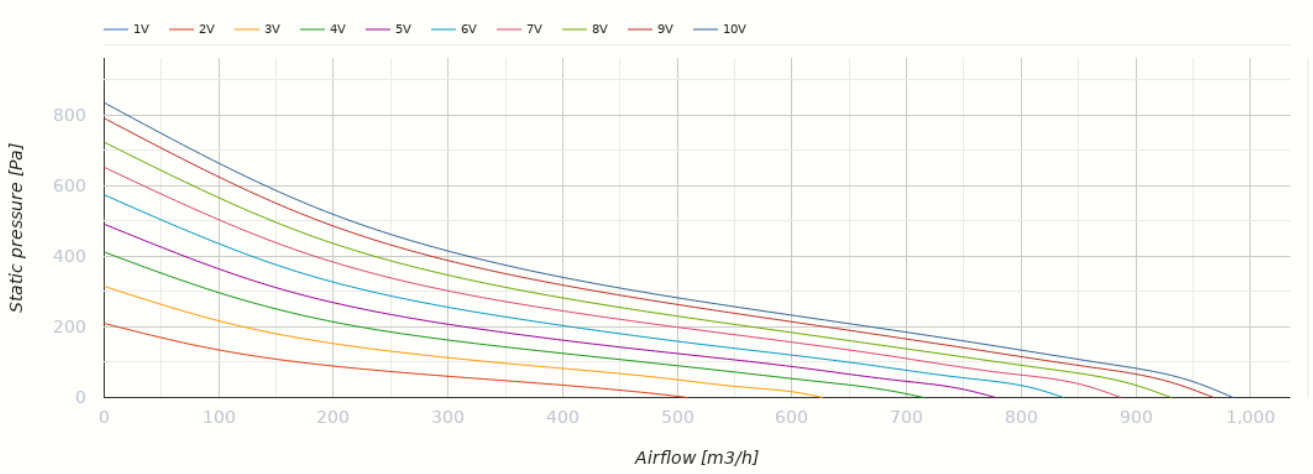

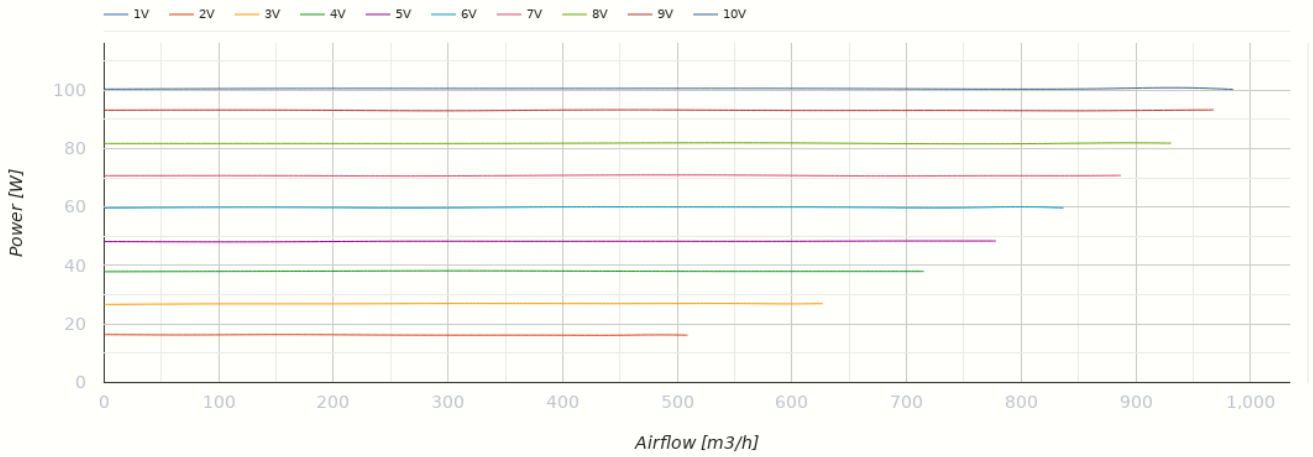

Dimensions

ØD	ØD1	B	B1	L	L1	L2	L3
248	345	395	355	250	25	30	40

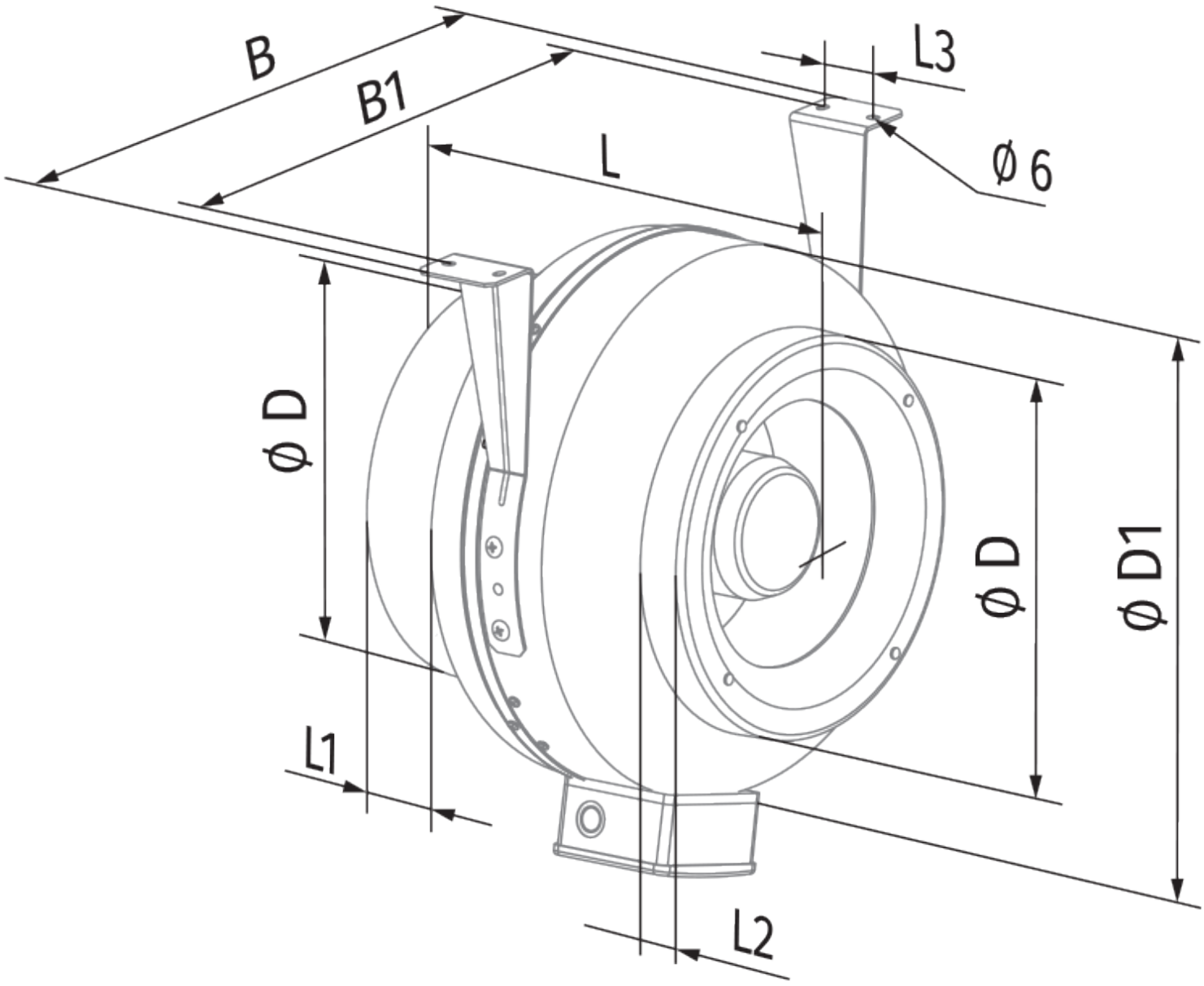
B
B1
L
L3
Ø 6
Ø D
Ø D
Ø D1
L1
L2

Ecodesign

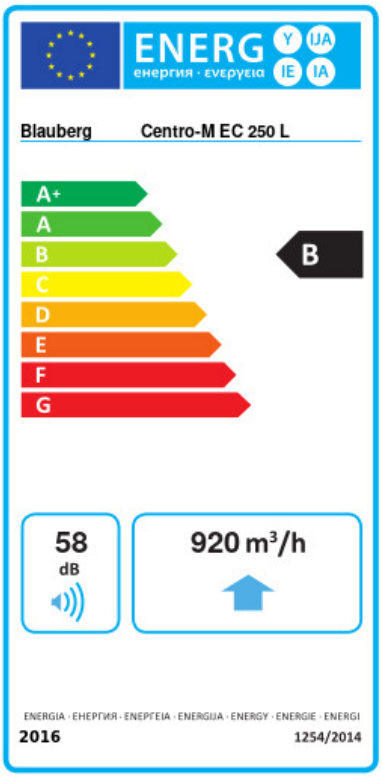

Trademark	Blauberg					
Model	Centro-M EC 250 L					
Specific energy consumption (SEC) (kWh/(m²/a))	Cold		Average		Warm	
	-54.6	A+	-27.5	B	-12	E
Type of ventilation unit	Unidirectional					
Type of drive installed	Variable speed					
Type of heat recovery system	None					
Maximum flow rate (m³/h)	920					
Electric power input (W)	105					
Reference flow rate (m³/s)	0.179					
Reference pressure difference (Pa)	50					
Specific power input (SPI) (W/(m³/h))	0.061					
Control typology	Local demand control					
Maximum external leakage rates (%)	2.7					
Declared typology	RVU UVU					
Sound power level (dB(A))	58					
The annual electricity consumption (AEC) (kWh/a)	Cold		Average		Warm	
	32		32		32	
The annual heating saved (AHS) (kWh/a)	Cold		Average		Warm	
	5536		2830		1280	

Accessories

For round ducts

Name	Photo	Description
SD 250/600		Silencers for round ducts
SD 250/900		Silencers for round ducts
SD 250/1200		Silencers for round ducts

For round ducts

Name	Photo	Description
KFBK 250		Filter boxes for round ducts
KFBT 250 G4	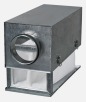	Filter boxes with pocket filters for round ducts
KFBT 250 F5		Filter boxes with pocket filters for round ducts
KFBT 250 F7		Filter boxes with pocket filters for round ducts

For round ducts

Name	Photo	Description
VRV 250		Backdraft dampers with spring for round ducts
VKA 250		Air dampers for round ducts

Water heaters

Name	Photo	Description
WKH 250-2		Duct water heaters for round ducts
WKH 250-4		Duct water heaters for round ducts

Electrical heaters

Name	Photo	Description
EKH 250-1.2		Duct electrical heaters for round ducts
EKH 250-2.0		Duct electrical heaters for round ducts

EKH 250-2.4		Duct electrical heaters for round ducts
EKH 250-3.0		Duct electrical heaters for round ducts

EC motors regulators

Name	Photo	Description
CDT E/0-10		Speed control for EC motors