

Centro-M EC 160

Centrifugal inline fans with EC-motors

• Impeller type: Centrifugal impeller with backward curved blades
• Casing material: Coated steel
• Installation in any position

	Unit of measurement	Centro-M EC 160
Phases	-	1
Minimum supply voltage	V	230
Maximum supply voltage	V	230
Power supply frequency	Hz	50/60
Maximum airflow	m³/h	735
Weight	kg	4.9
Transported air temperature (max)	°C	60
Transported air temperature (min)	°C	-25
Ingress protection rating	-	IPX4
Ingress protection rating of the drive	-	IP44
Impeller material	-	Plastic

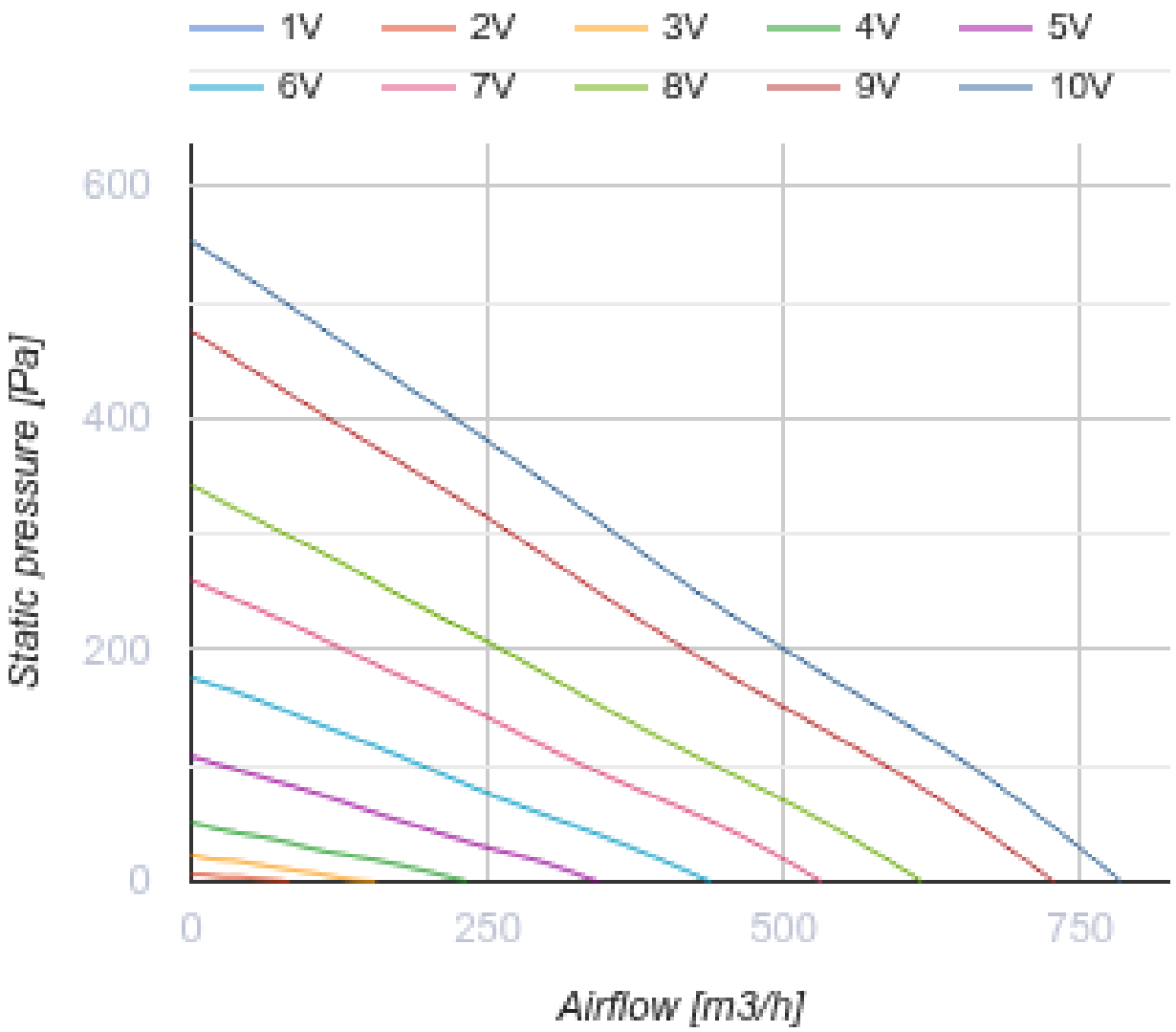
1V
2V
3V
4V
5V
6V
7V
8V
9V
10V
600
400
200
0
Static pressure [Pa]
0
250
500
750
Airflow [m3/h]

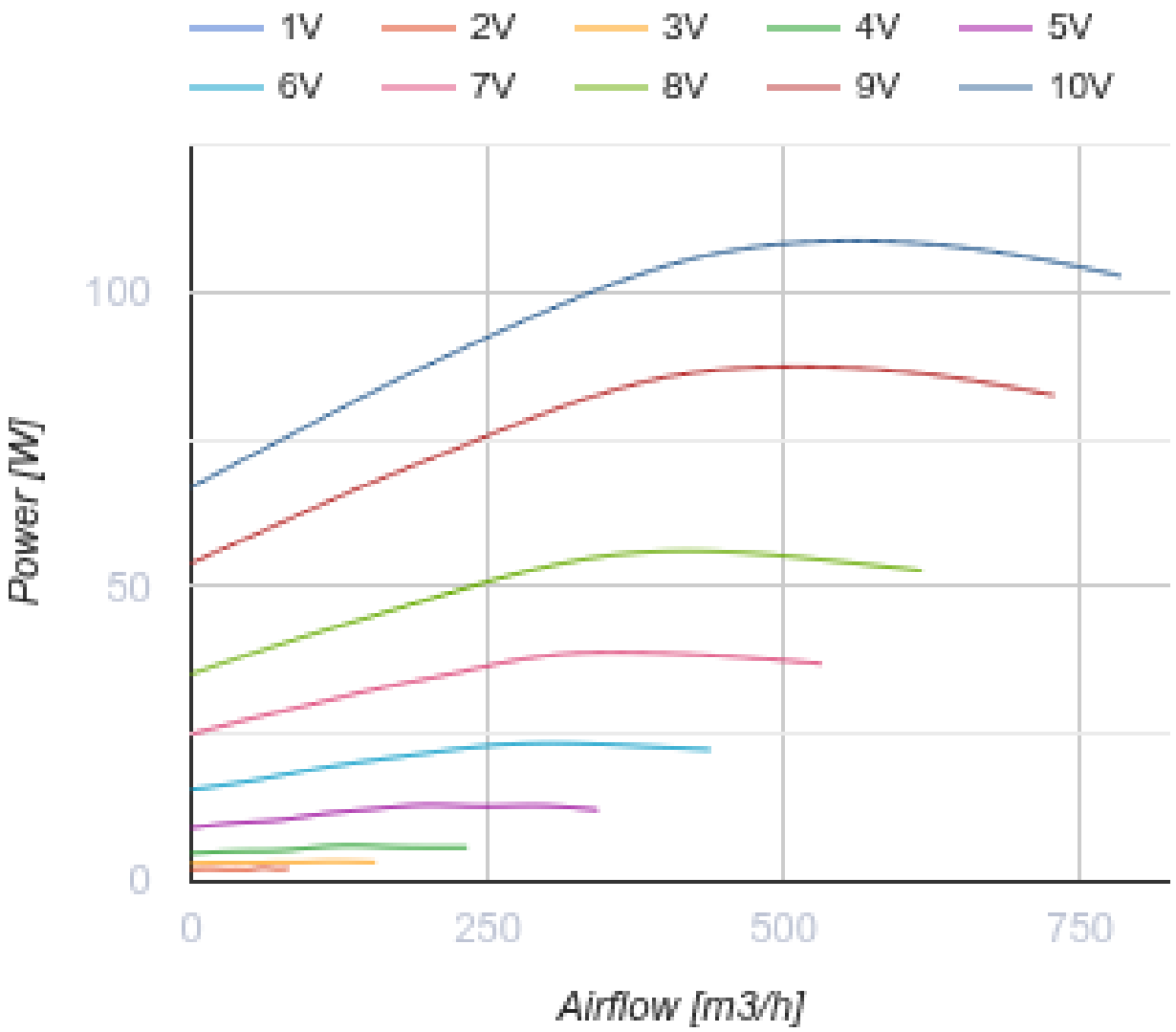

Dimensions

Ø D	Ø D1	B	B1	L	L1	L2	L3	H
159	275	330	290	170	20	20	30	345

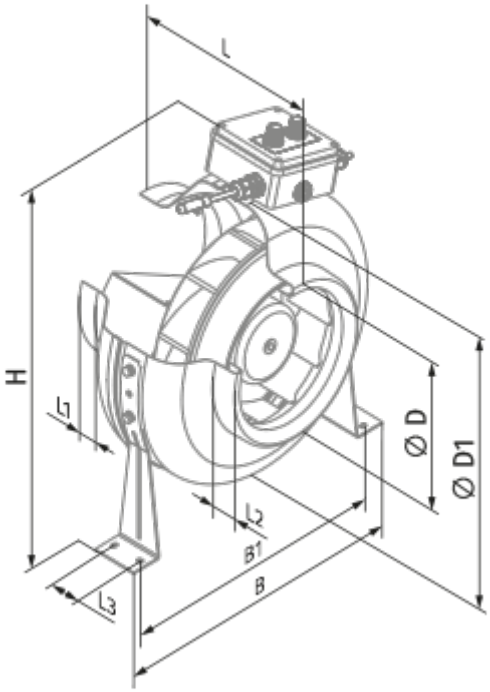
L
H
L1
L2
L3
B1
B
Ø D
Ø D1

Ecodesign

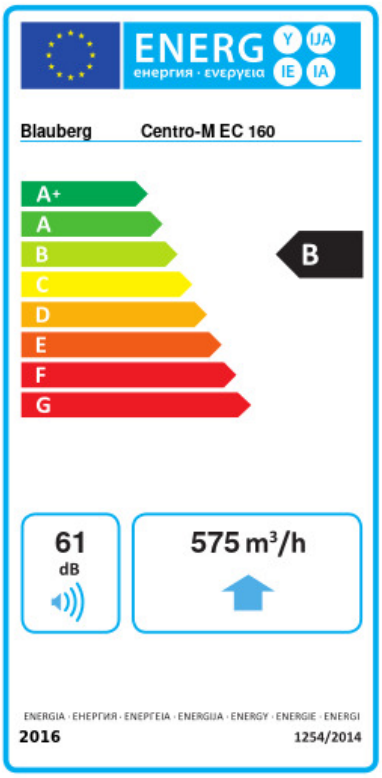

Trademark	Blauberg					
Model	Centro-M EC 160					
Specific energy consumption (SEC) (kWh/(m²/a))	Cold		Average		Warm	
	-54.1	A+	-27.1	B	-11.6	E
Type of ventilation unit	Unidirectional					
Type of drive installed	Variable speed					
Type of heat recovery system	None					
Maximum flow rate (m³/h)	575					
Electric power input (W)	102					
Reference flow rate (m³/s)	0.112					
Reference pressure difference (Pa)	50					
Specific power input (SPI) (W/(m³/h))	0.093					
Control typology	Local demand control					
Maximum external leakage rates (%)	2.7					
Declared typology	RVU UVU					
Sound power level (dB(A))	61					
The annual electricity consumption (AEC) (kWh/a)	Cold		Average		Warm	
	49		49		49	
The annual heating saved (AHS) (kWh/a)	Cold		Average		Warm	
	5536		2830		1280	

Accessories

For round ducts

Name	Photo	Description
SD 160/600		Silencers for round ducts
SD 160/900		Silencers for round ducts
SD 160/1200		Silencers for round ducts

For round ducts

Name	Photo	Description
KFBK 160		Filter boxes for round ducts
KFBT 160 G4	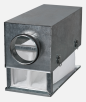	Filter boxes with pocket filters for round ducts
KFBT 160 F5		Filter boxes with pocket filters for round ducts
KFBT 160 F7		Filter boxes with pocket filters for round ducts

For round ducts

Name	Photo	Description
VRV 160		Backdraft dampers with spring for round ducts
VKA 160		Air dampers for round ducts

Water heaters

Name	Photo	Description
WKH 160-2		Duct water heaters for round ducts
WKH 160-4		Duct water heaters for round ducts

Electrical heaters

Name	Photo	Description
EKH 160-1.2		Duct electrical heaters for round ducts
EKH 160-1.7		Duct electrical heaters for round ducts

EKH 160-2.0		Duct electrical heaters for round ducts
EKH 160-2.4		Duct electrical heaters for round ducts
EKH 160-3.4		Duct electrical heaters for round ducts

EC motors regulators

Name	Photo	Description
CDT E/0-10		Speed control for EC motors

Fittings

Name	Photo	Description
K 160		Clamp for round flexible ducts
K 160 Zn		Clamp for round flexible ducts