

Centro-M EC 125

Centrifugal inline fans with EC-motors

• Impeller type: Centrifugal impeller with backward curved blades
• Casing material: Coated steel
• Installation in any position

	Unit of measurement	Centro-M EC 125
Phases	-	1
Minimum supply voltage	V	230
Maximum supply voltage	V	230
Power supply frequency	Hz	50/60
Maximum airflow	m^3/h	480
Weight	kg	3.2
Transported air temperature (max)	°C	60
Transported air temperature (min)	°C	-25
Ingress protection rating	-	IPX4
Ingress protection rating of the drive	-	IP44
Impeller material	-	Plastic

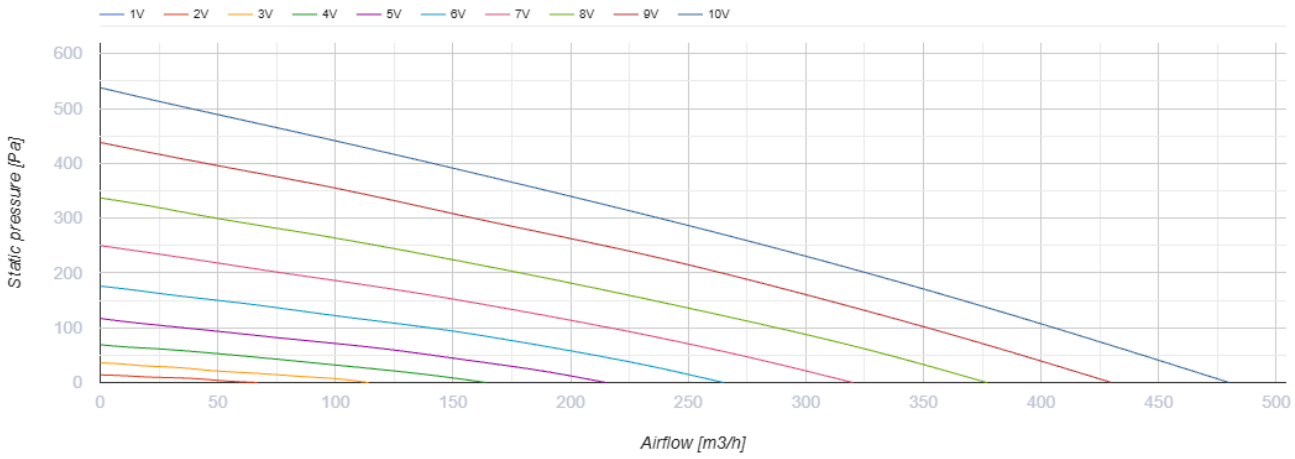

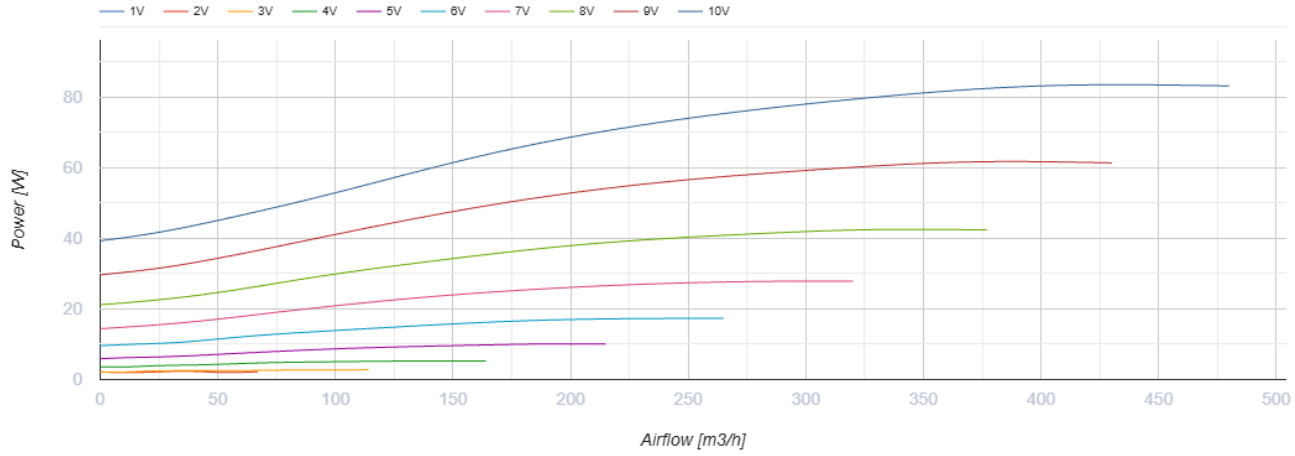

Dimensions

Ø D	Ø D1	B	B1	L	L1	L2	L3	H
124	245	300	260	190	20	20	30	330

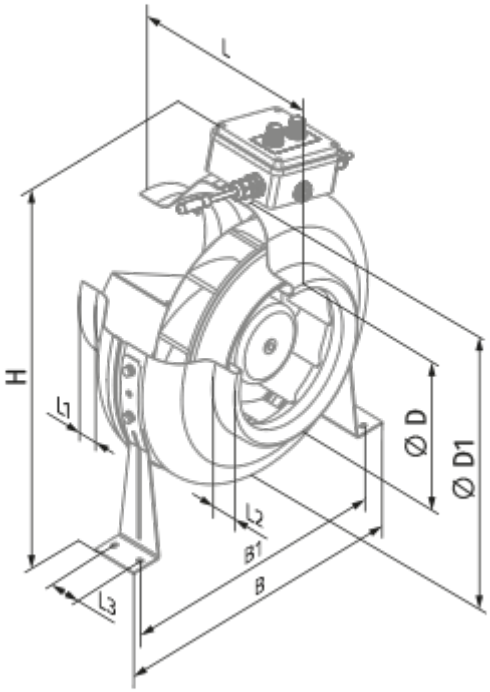
L
H
L1
L2
L3
B1
B
Ø D
Ø D1

Ecodesign

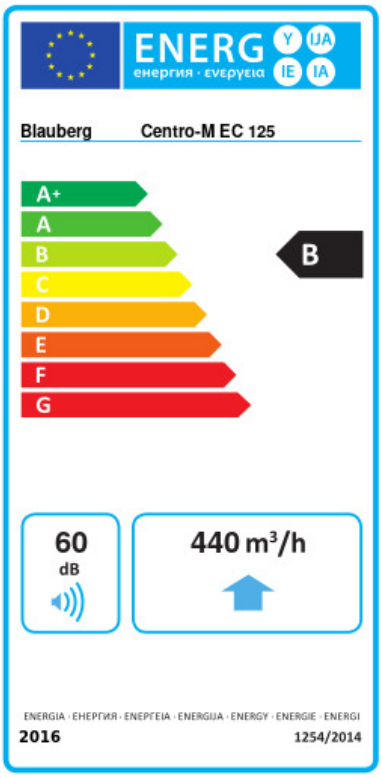

Trademark	Blauberg					
Model	Centro-M EC 125					
Specific energy consumption (SEC) (kWh/(m²/a))	Cold		Average		Warm	
	-53.9	A+	-26.8	B	-11.3	E
Type of ventilation unit	Unidirectional					
Type of drive installed	Variable speed					
Type of heat recovery system	None					
Maximum flow rate (m³/h)	440					
Electric power input (W)	93.5					
Reference flow rate (m³/s)	0.086					
Reference pressure difference (Pa)	50					
Specific power input (SPI) (W/(m³/h))	0.11					
Control typology	Local demand control					
Maximum external leakage rates (%)	2.7					
Declared typology	RVU UVU					
Sound power level (dB(A))	60					
The annual electricity consumption (AEC) (kWh/a)	Cold		Average		Warm	
	58		58		58	
The annual heating saved (AHS) (kWh/a)	Cold		Average		Warm	
	5536		2830		1280	

Accessories

For round ducts

Name	Photo	Description
SD 125/600		Silencers for round ducts
SD 125/900		Silencers for round ducts
SD 125/1200		Silencers for round ducts

For round ducts

Name	Photo	Description
KFBK 125		Filter boxes for round ducts
KFBT 125 G4	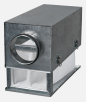	Filter boxes with pocket filters for round ducts
KFBT 125 F5		Filter boxes with pocket filters for round ducts
KFBT 125 F7		Filter boxes with pocket filters for round ducts

For round ducts

Name	Photo	Description
VRV 125		Backdraft dampers with spring for round ducts
VKA 125		Air dampers for round ducts

Water heaters

Name	Photo	Description
WKH 125-2		Duct water heaters for round ducts
WKH 125-4		Duct water heaters for round ducts

Electrical heaters

Name	Photo	Description
EKH 125-0.6		Duct electrical heaters for round ducts
EKH 125-0.8		Duct electrical heaters for round ducts

EKH 125-1.2		Duct electrical heaters for round ducts
EKH 125-1.6		Duct electrical heaters for round ducts
EKH 125-2.4		Duct electrical heaters for round ducts

EC motors regulators

Name	Photo	Description
CDT E/0-10		Speed control for EC motors

Fittings

Name	Photo	Description
K 125		Clamp for round flexible ducts
K 125 Zn		Clamp for round flexible ducts