

Centro-M 355 L

Centrifugal inline fans

• Impeller type: Centrifugal impeller with backward curved blades
• Casing material: Coated steel
• Installation in any position

	Unit of measurement	Centro-M 355 L	
Phases	-	1	
Minimum supply voltage	V	220	
Maximum supply voltage	V	240	
Power supply frequency	Hz	50	60
Maximum airflow	m³/h	2250	
Weight	kg	18.8	
Transported air temperature (max)	°C	45	
Transported air temperature (min)	°C	-25	
Ingress protection rating	-	IPX4	
Ingress protection rating of the drive	-	IP44	
Impeller material	-	Galvanized steel	

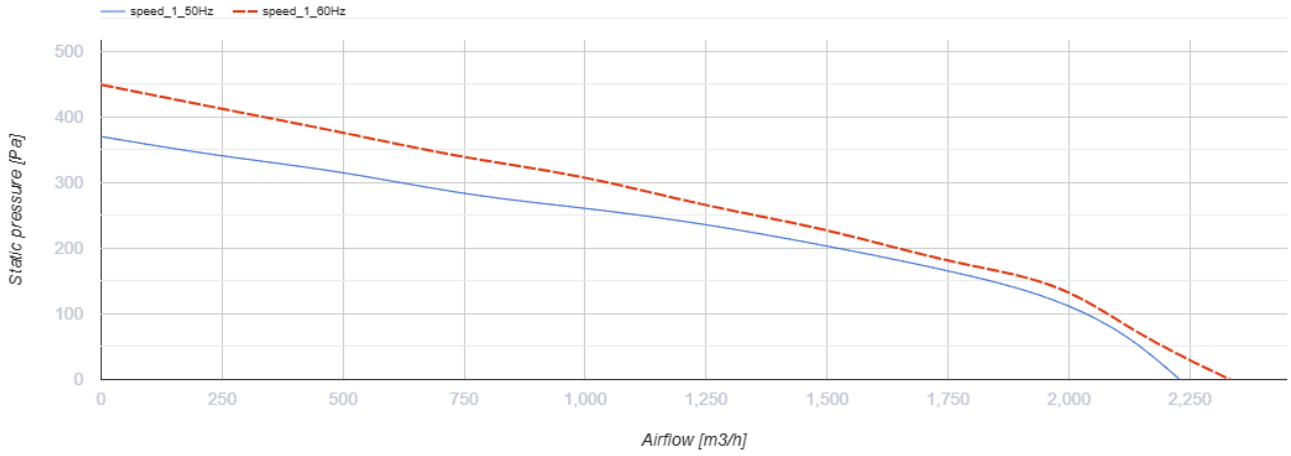

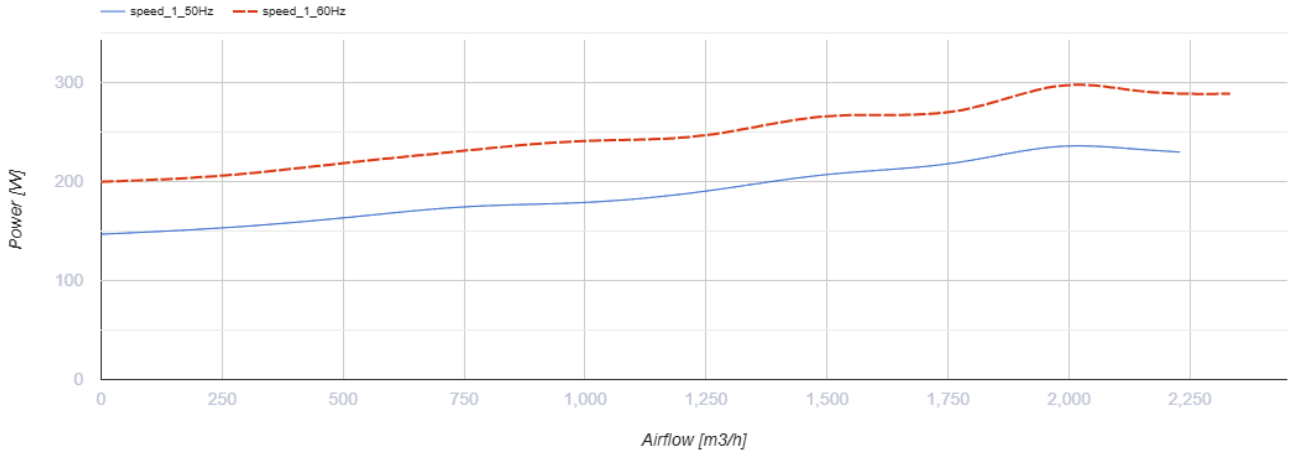

Dimensions

Ø D	Ø D1	B	B1	L	L1	L2	L3
353	460	522	522	506	60	60	70

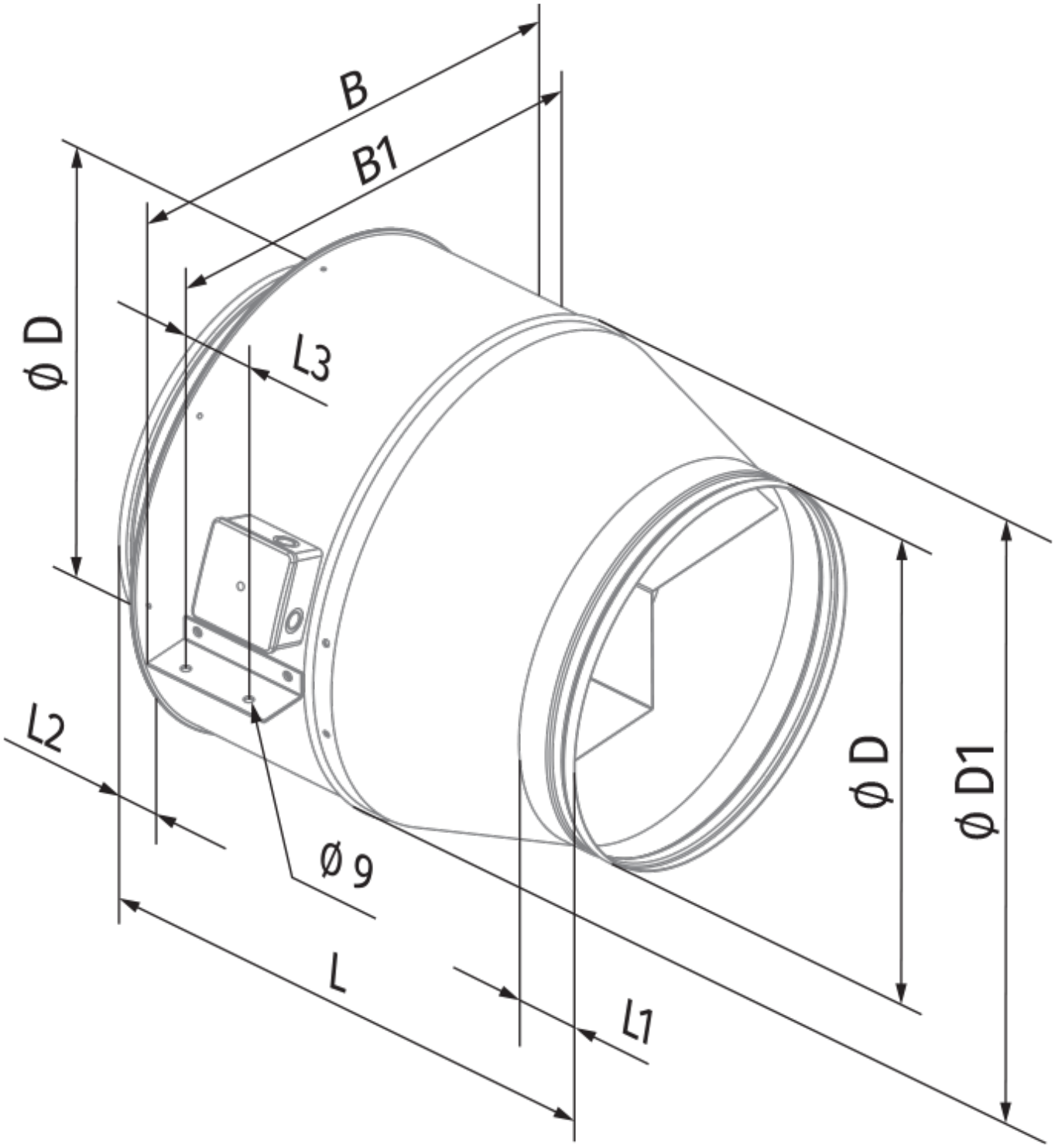
B
B1
ø D
L3
L2
ø 9
L
L1
ø D
ø D1

Ecodesign

Trademark	Blauberg
Model	Centro-M 355 L
Type of ventilation unit	Unidirectional
Type of drive installed	External MSD or VSD
Type of heat recovery system	None
Nominal external pressure (Pa)	172
Maximum external leakage rates (%)	2.7
Static efficiency (%)	37.8
Declared typology	NRVU UVU
Effective electric power input (kW)	0.22
Sound power level (dB(A))	78

Accessories

For round ducts

Name	Photo	Description
SD 355/600		Silencers for round ducts
SD 355/900		Silencers for round ducts
SD 355/1200		Silencers for round ducts

For round ducts

Name	Photo	Description
VKA 355		Air dampers for round ducts

Speed controllers

Name	Photo	Description

CDT E1.8		Thyristor speed controller
CDT1 E1.5		Multi-speed switches
CDTE E1.5 TP		Speed controllers