

Centro-M 150 max

Centrifugal inline fans

• Impeller type: Centrifugal impeller with backward curved blades
• Casing material: Coated steel
• Installation in any position

	Unit of measurement	Centro-M 150 max	
Phases	-	1	
Minimum supply voltage	V	220	
Maximum supply voltage	V	240	
Power supply frequency	Hz	50	60
Maximum airflow	m³/h	710	
Weight	kg	5.4	
Transported air temperature (max)	°C	45	
Transported air temperature (min)	°C	-25	
Ingress protection rating	-	IPX4	
Ingress protection rating of the drive	-	IP44	
Impeller material	-	Plastic	

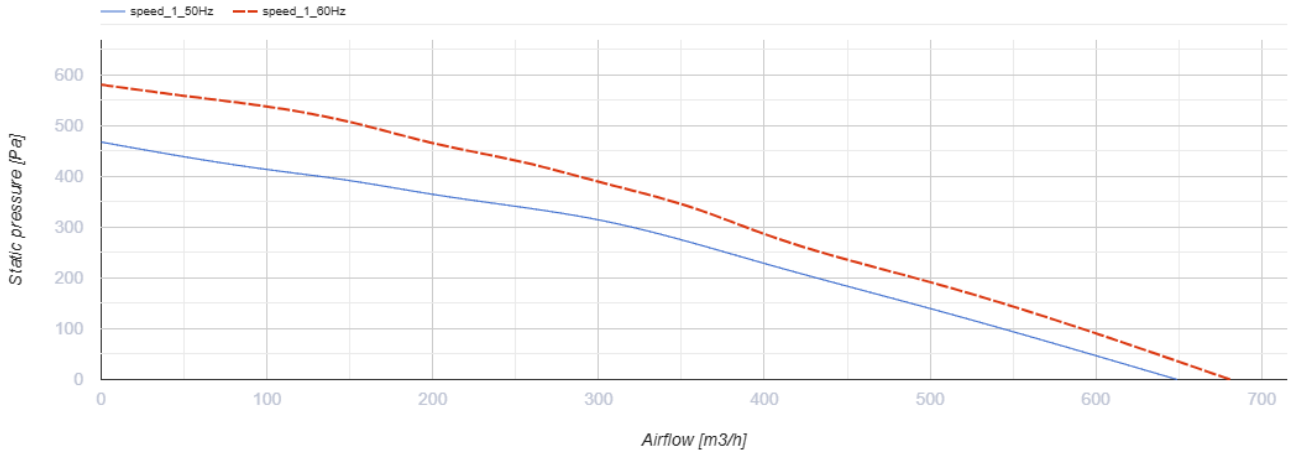

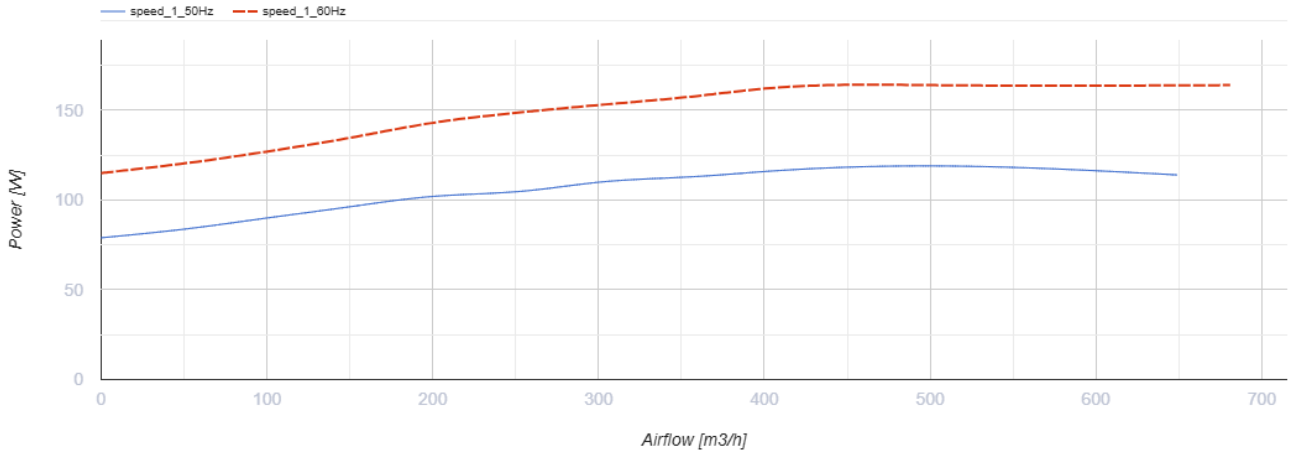

Dimensions

Ø D	Ø D1	B	B1	L	L1	L2	L3
149	345	395	355	230	20	20	40

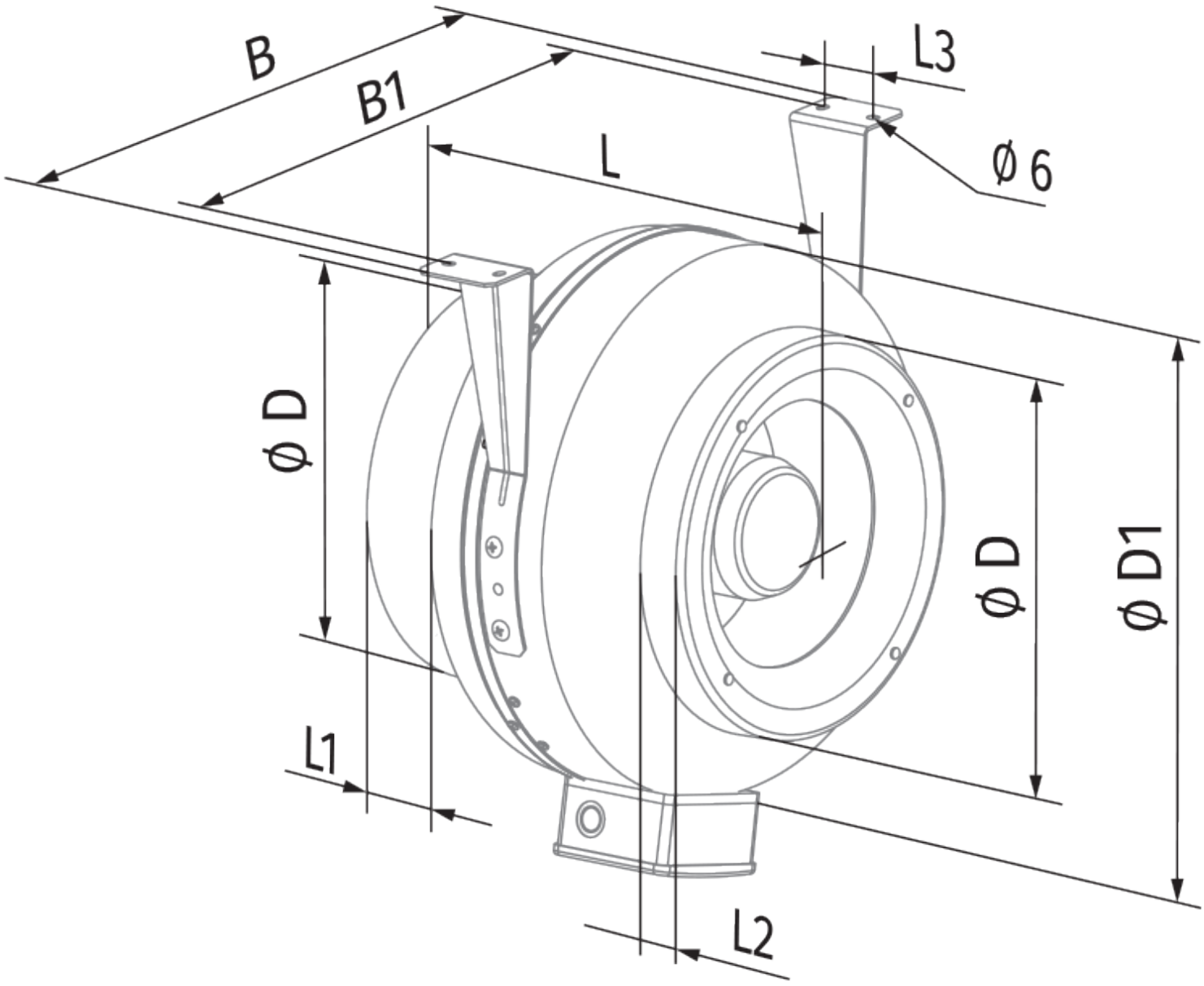
B
B1
L
L3
Ø 6
Ø D
Ø D
Ø D1
L1
L2

Ecodesign

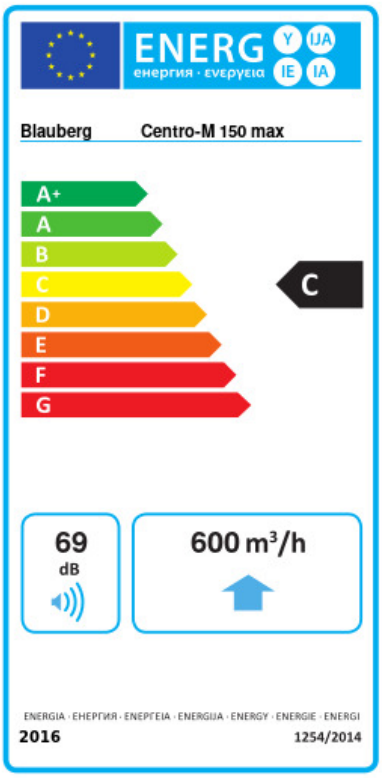

Trademark	Blauberg					
Model	Centro-M 150 max					
Specific energy consumption (SEC) (kWh/(m²/a))	Cold		Average		Warm	
	-52.6	A+	-25.5	C	-10	E
Type of ventilation unit	Unidirectional					
Type of drive installed	Variable speed					
Type of heat recovery system	None					
Maximum flow rate (m³/h)	600					
Electric power input (W)	126					
Reference flow rate (m³/s)	0.117					
Reference pressure difference (Pa)	50					
Specific power input (SPI) (W/(m³/h))	0.21					
Control typology	Local demand control					
Maximum external leakage rates (%)	2.7					
Declared typology	RVU UVU					
Sound power level (dB(A))	69					
The annual electricity consumption (AEC) (kWh/a)	Cold		Average		Warm	
	111		111		111	
The annual heating saved (AHS) (kWh/a)	Cold		Average		Warm	
	5536		2830		1280	

Accessories

For round ducts

Name	Photo	Description
SD 150/600		Silencers for round ducts
SD 150/900		Silencers for round ducts
SD 150/1200		Silencers for round ducts

For round ducts

Name	Photo	Description
KFBK 150		Filter boxes for round ducts
KFBT 150 G4	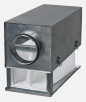	Filter boxes with pocket filters for round ducts
KFBT 150 F5		Filter boxes with pocket filters for round ducts
KFBT 150 F7		Filter boxes with pocket filters for round ducts

For round ducts

Name	Photo	Description
VRV 150		Backdraft dampers with spring for round ducts
VKA 150		Air dampers for round ducts

Water heaters

Name	Photo	Description
WKH 150-2		Duct water heaters for round ducts
WKH 150-4		Duct water heaters for round ducts

Electrical heaters

Name	Photo	Description
EKH 150-1.2		Duct electrical heaters for round ducts
EKH 150-1.7		Duct electrical heaters for round ducts

EKH 150-2.0		Duct electrical heaters for round ducts
EKH 150-2.4		Duct electrical heaters for round ducts
EKH 150-3.4		Duct electrical heaters for round ducts
EKH 150-3.6		Duct electrical heaters for round ducts
EKH 150-5.1		Duct electrical heaters for round ducts
EKH 150-6.0		Duct electrical heaters for round ducts

Speed controllers

Name	Photo	Description
CDT E1.8		Thyristor speed controller
CDT1 E1.5		Multi-speed switches
CDTE E1.5 TP		Speed controllers

Fittings

Name	Photo	Description
K 150		Clamp for round flexible ducts