

# Centro EC 250 GI1

Centrifugal inline fans in plastic casings with EC-motors

• Control: Built-in speed controller
• Impeller type: Centrifugal impeller with backward curved blades
• Casing material: Plastic
• Installation in any position
• Cable with mains plug
• Temperature sensor: Built-in

| | Unit of measurement | Centro EC 250 GI1 |
|---|---|---|
| Phases | - | 1 |
| Maximum supply voltage | V | 230 |
| Minimum supply voltage | V | 230 |
| Power supply frequency | Hz | 50/60 |
| Maximum airflow | m³/h | 1250 |
| Weight | kg | 4.3 |
| Transported air temperature (max) | °C | 60 |
| Transported air temperature (min) | °C | -25 |
| Ingress protection rating | - | IPX4 |
| Ingress protection rating of the drive | - | IP55 |
| Impeller material | - | Plastic |

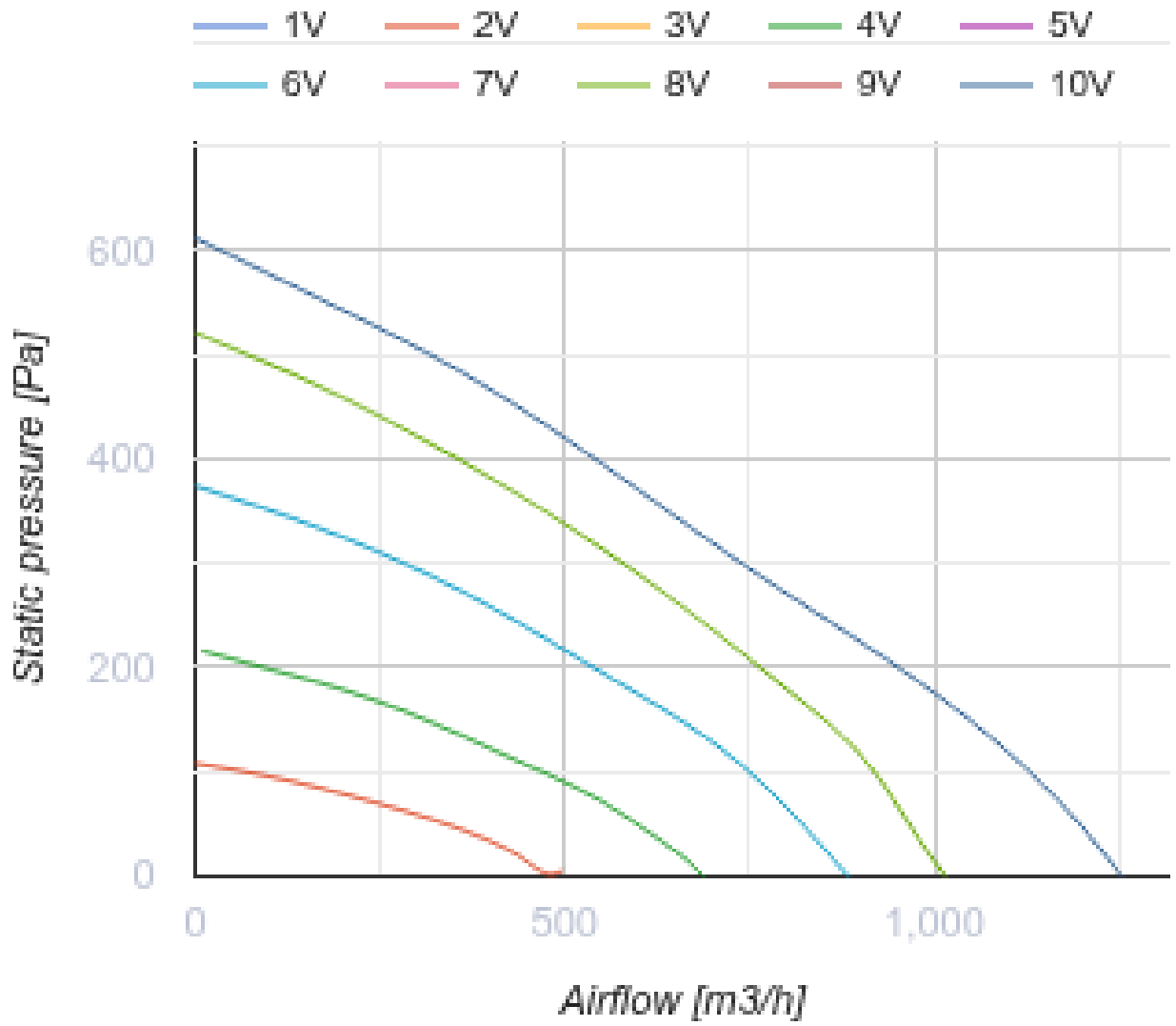
1V
2V
3V
4V
5V
6V
7V
8V
9V
10V
600
400
200
0
Static pressure [Pa]
0
500
1,000
Airflow [m3/h]

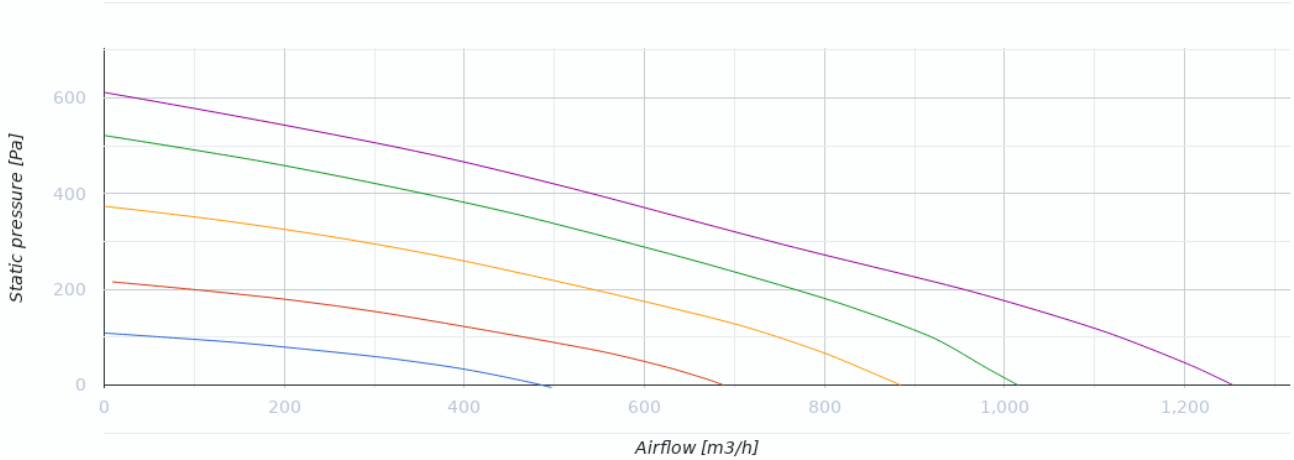
600
400
200
0
Static pressure [Pa]
0
200
400
600
800
1,000
1,200
Airflow [m3/h]

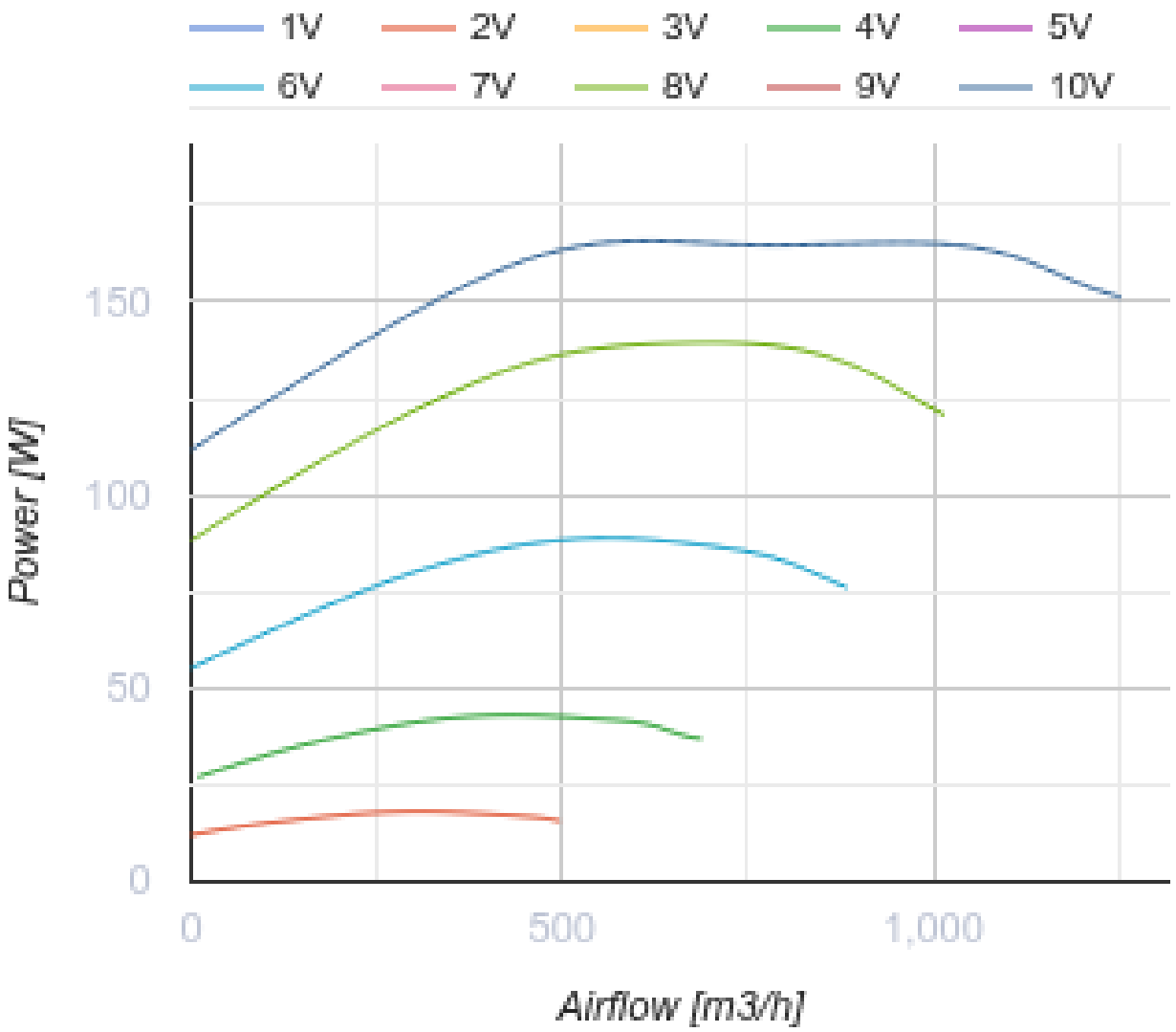


## Dimensions

| ØD | ØD1 | B | L | L1 | L2 | L3 |
|---|---|---|---|---|---|---|
| 250 | 340 | 354 | 265 | 30 | 30 | 30 |

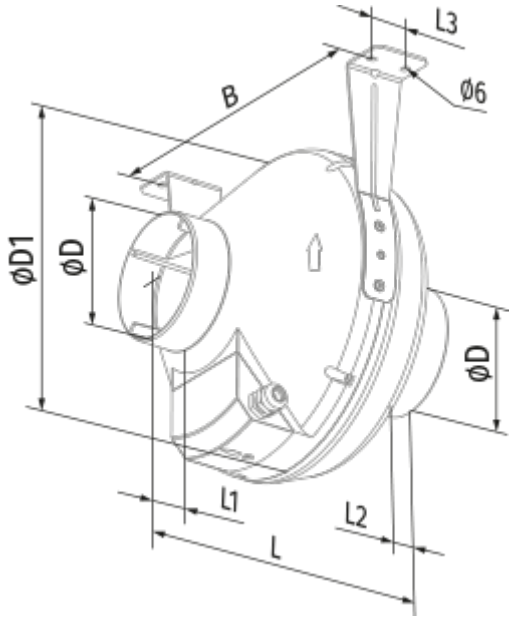
L3
B
Ø6
ØD1
ØD
ØD
L1
L2
L

## Ecodesign

| | |
|---|---|
| Trademark | Blauberg |
| Model | Centro EC 250 GI1 |
| Type of drive installed | Integrated VSD |
| Type of heat recovery system | None |
| Nominal external pressure (Pa) | 754 |
| Maximum external leakage rates (%) | 2.7 |
| Static efficiency (%) | 42.2 |
| Sound power level (dB(A)) | 66 |
| Effective electric power input (kW) | 0.17 |
| Declared typology | NRVU UVU |

## Accessories

### EC motors regulators

| Name | Photo | Description |
|---|---|---|
| CDT E/0-10 |  | Speed control for EC motors |