

Centro EC 250

Centrifugal inline fans in plastic casings with EC-motors

• Impeller type: Centrifugal impeller with backward curved blades
• Casing material: Plastic
• Installation in any position

	Unit of measurement	Centro EC 250
Phases	-	1
Minimum supply voltage	V	230
Maximum supply voltage	V	230
Power supply frequency	Hz	50/60
Maximum airflow	m³/h	1250
Weight	kg	4.3
Transported air temperature (max)	°C	60
Transported air temperature (min)	°C	-25
Ingress protection rating	-	IPX4
Ingress protection rating of the drive	-	IP55
Impeller material	-	Plastic

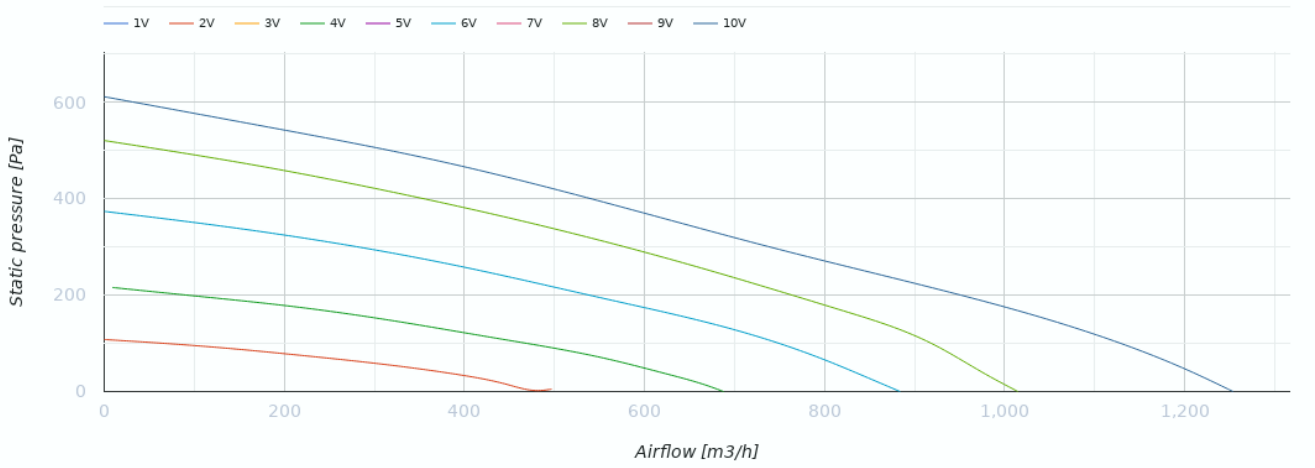

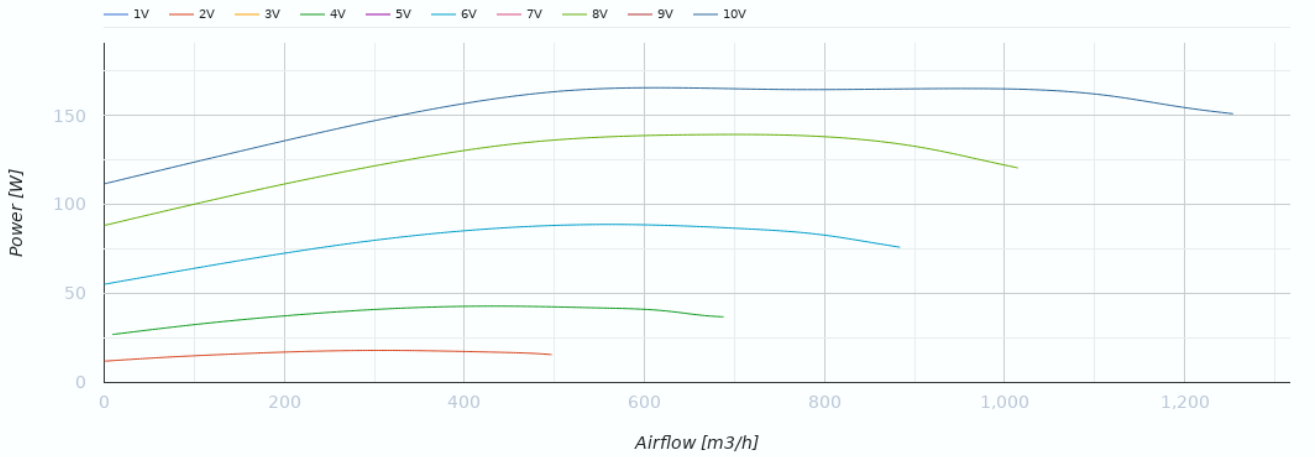

Dimensions

ØD	ØD1	B	L	L1	L2	L3
250	340	354	265	30	30	30

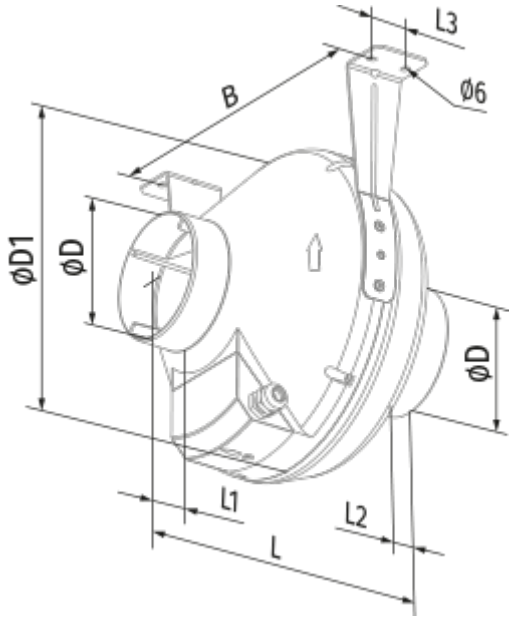
L3
B
Ø6
ØD1
ØD
ØD
L1
L2
L

Ecodesign

Trademark	Blauberg
Model	Centro EC 250
Type of ventilation unit	Unidirectional
Type of drive installed	Integrated VSD
Type of heat recovery system	None
Nominal external pressure (Pa)	754
Maximum external leakage rates (%)	2.7
Static efficiency (%)	42.2
Declared typology	NRVU UVU
Effective electric power input (kW)	0.17
Sound power level (dB(A))	66

Accessories

EC motors regulators

Name	Photo	Description
CDT E/0-10		Speed control for EC motors